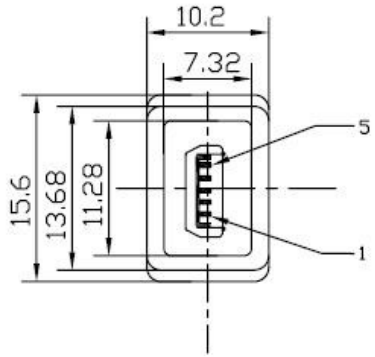

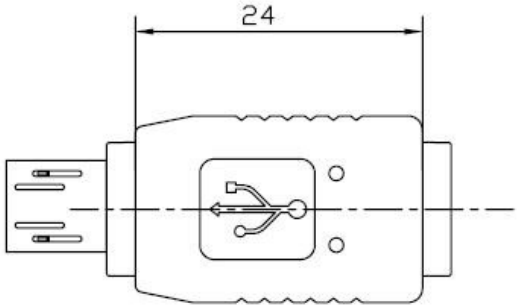

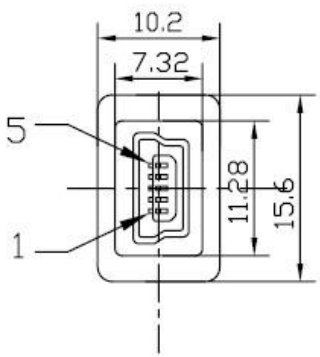

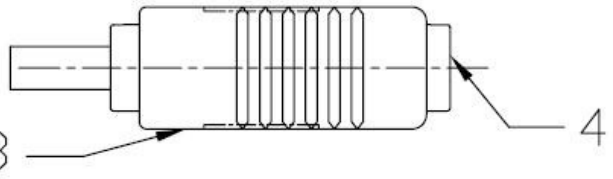

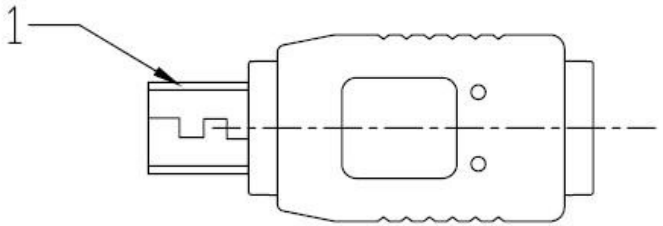

PIN ASSENGMENT

MICRO BM	——	5F
1	——	1
2	——	2
3	——	3
5	——	5
SHELL	——	SHELL

ELECTRICAL PROPERTIES:

1. 100% OPEN SHORT MIS-WIRE TEST
2. Contact Resistance:10ohm
3. Insulation Resistance:5Mega ohm
4. HI-POT:300V/10ms

NO.	DESCRIPTION	UNIT	QT'Y
4	MINI USB 5P FEMALE B TYPE SHELL PLATED:NICKEL CONTACT:G/F	PCS	1
3	INNER WIRE:UL1007 30AWG	PCS	
2	PVC 55P MOLD BLACK IN COLOR	SET	1
1	MICRO USB B TYPE MALE SHELL PLATED:NICKEL CONTACT:G/F	PCS	1

REV.	DESCRIPTION	DATE
A		09/08/11

UNLESS OTHERWISE SPECIFIED TOLERANCE
ANG. ±5'
0. ±0.5
.0 ±0.3
.00 ±0.2

SCALE: 1:1	UNIT: mm		
DRAWN lych	09/08/11	DRAWN NAME: 競捷 US96	
CHECKED Xing Fa	09/08/11		
APPROVED	/ /	PRODUCT NO.	
SIZE A4	REV. A	FILE NAME:	