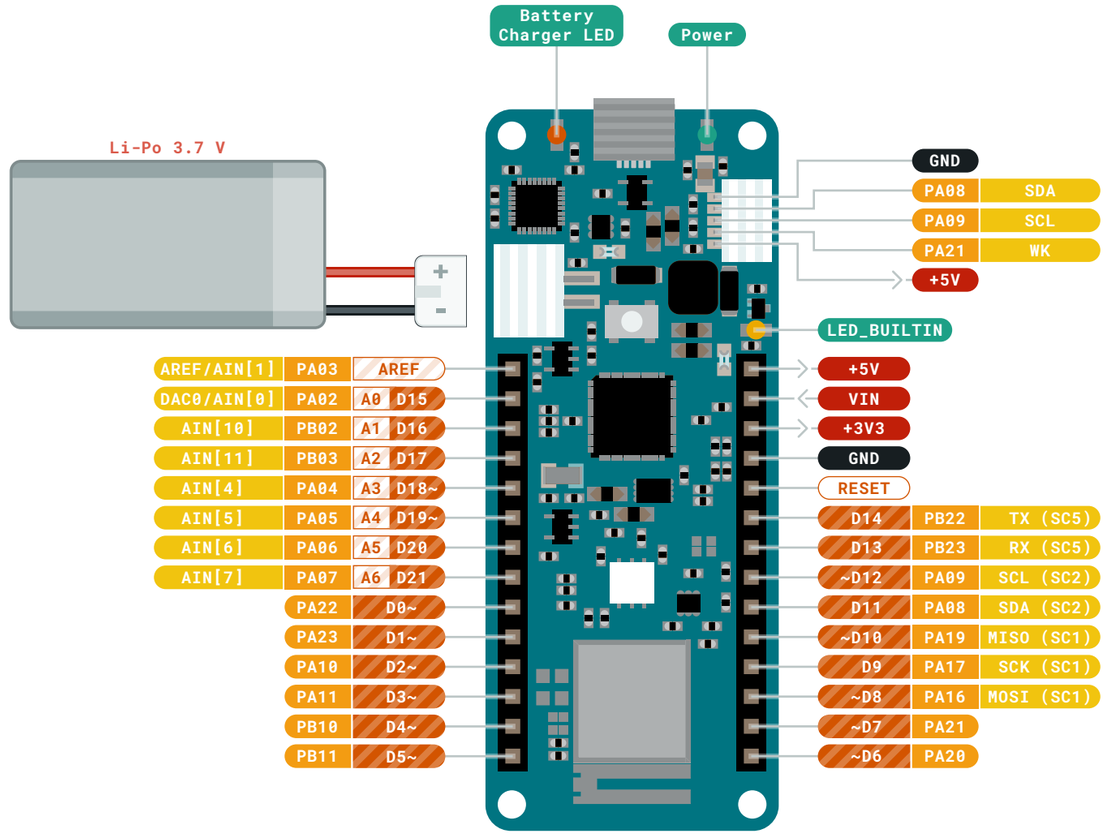


Ground
Power
LED
Internal Pin
SWD Pin

Digital Pin
Analog Pin
Other Pin
Microcontroller's Port
Default

**MAXIMUM** current per pin is 7mA

**MAXIMUM** source current is 46mA

**MAXIMUM** sink current is 65mA per pin group

**VIN** Input voltage to the board.

ARDUINO.CC

**Last update: 23/03/2020**

This work is licensed under the Creative Commons Attribution-ShareAlike 4.0 International License. To view a copy of this license, visit http://creativecommons.org/licenses/by-sa/4.0/ or send a letter to Creative Commons, PO Box 1866, Mountain View, CA 94042, USA.

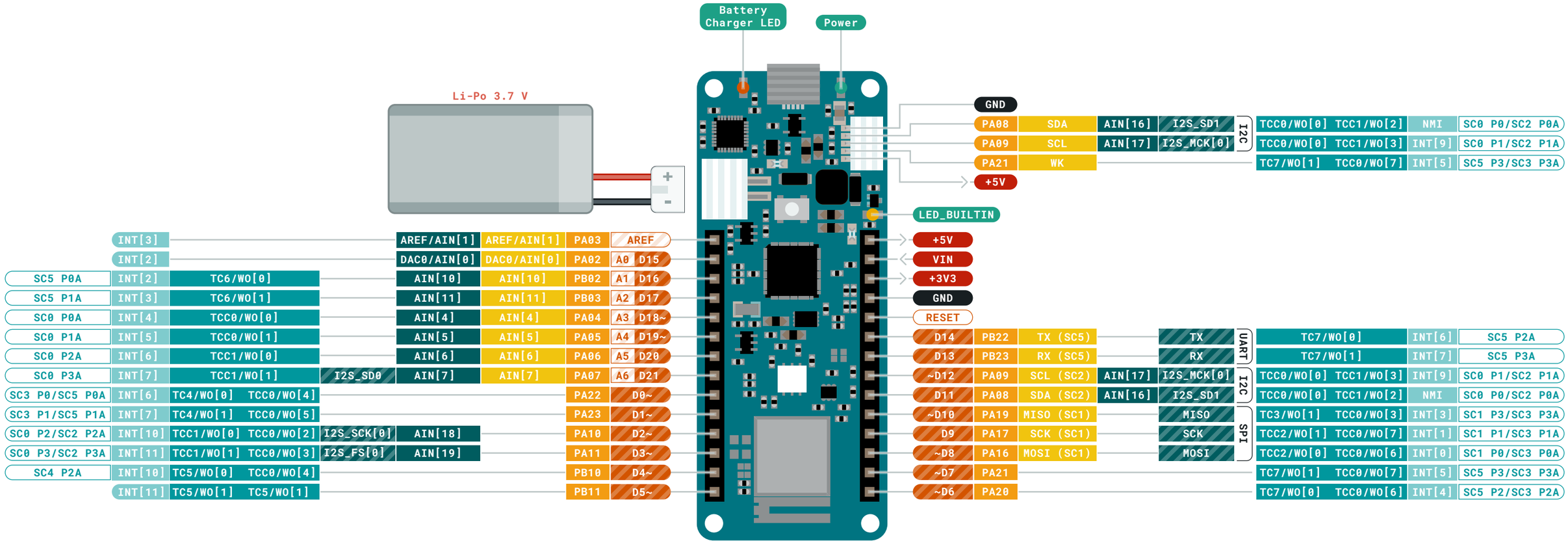


Ground
Power
LED
Internal Pin
SWD Pin

Digital Pin
Analog Pin
Other Pin
Microcontroller's Port
Default

Analog
Communication
Timer
Interrupt
Sercom

**MAXIMUM** current per pin is 7mA

**MAXIMUM** source current is 46mA

**MAXIMUM** sink current is 65mA per pin group

**VIN** Input voltage to the board.

ARDUINO.CC

**Last update: 23/03/2020**

This work is licensed under the Creative Commons Attribution-ShareAlike 4.0 International License. To view a copy of this license, visit http://creativecommons.org/licenses/by-sa/4.0/ or send a letter to Creative Commons, PO Box 1866, Mountain View, CA 94042, USA.

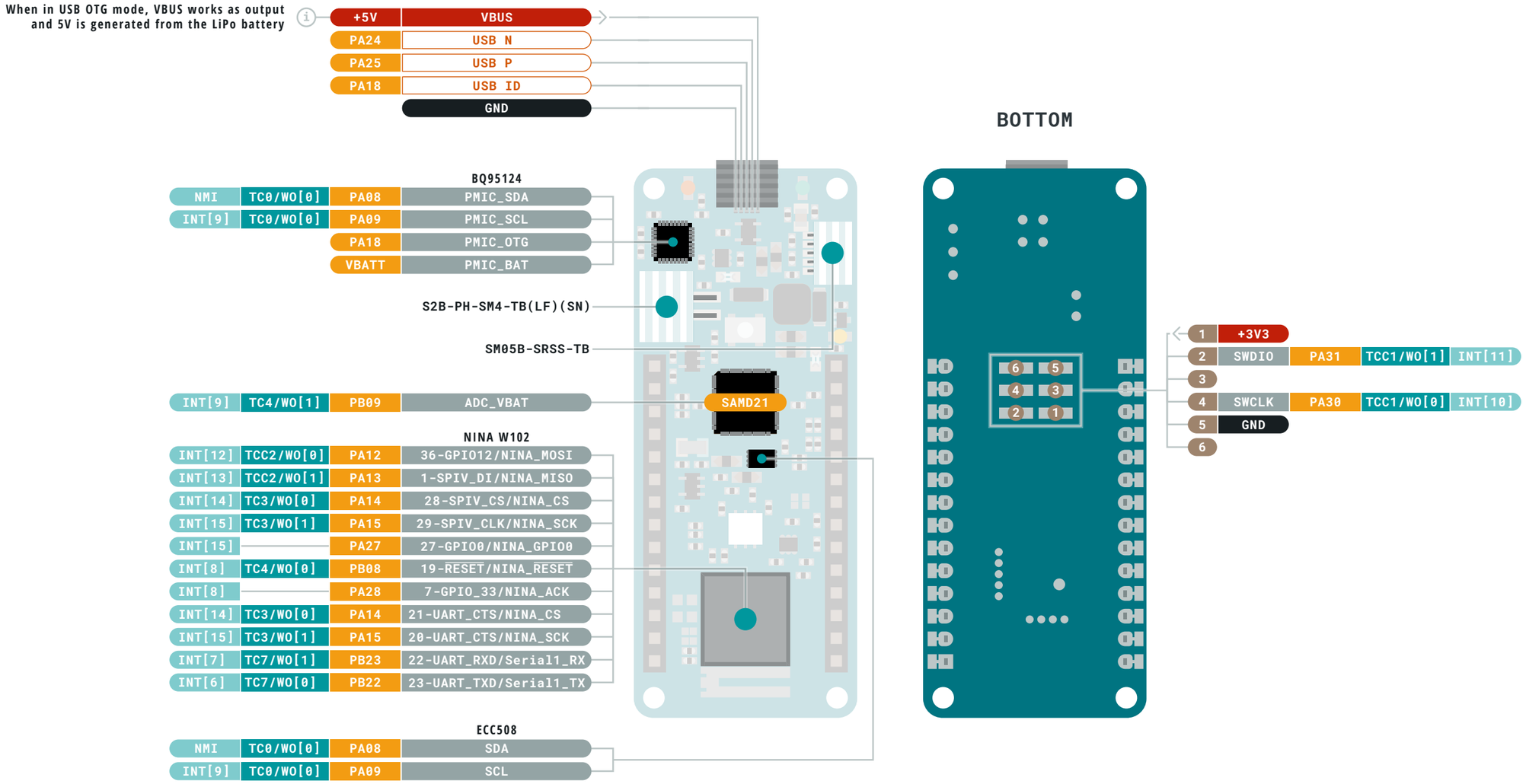


Ground
Power
LED
Internal Pin
SWD Pin

Digital Pin
Analog Pin
Other Pin
Microcontroller's Port
Default

Analog
Communication
Timer
Interrupt
Sercom

**MAXIMUM** current per pin is 7mA

**MAXIMUM** source current is 46mA

**MAXIMUM** sink current is 65mA per pin group

**VIN** Input voltage to the board.

ARDUINO.CC

**Last update: 23/03/2020**

This work is licensed under the Creative Commons Attribution-ShareAlike 4.0 International License. To view a copy of this license, visit http://creativecommons.org/licenses/by-sa/4.0/ or send a letter to Creative Commons, PO Box 1866, Mountain View, CA 94042, USA.