Rev	Modification Content	Date	Validate
A	the First Edition	2007-12-14	Cindy

ROHS

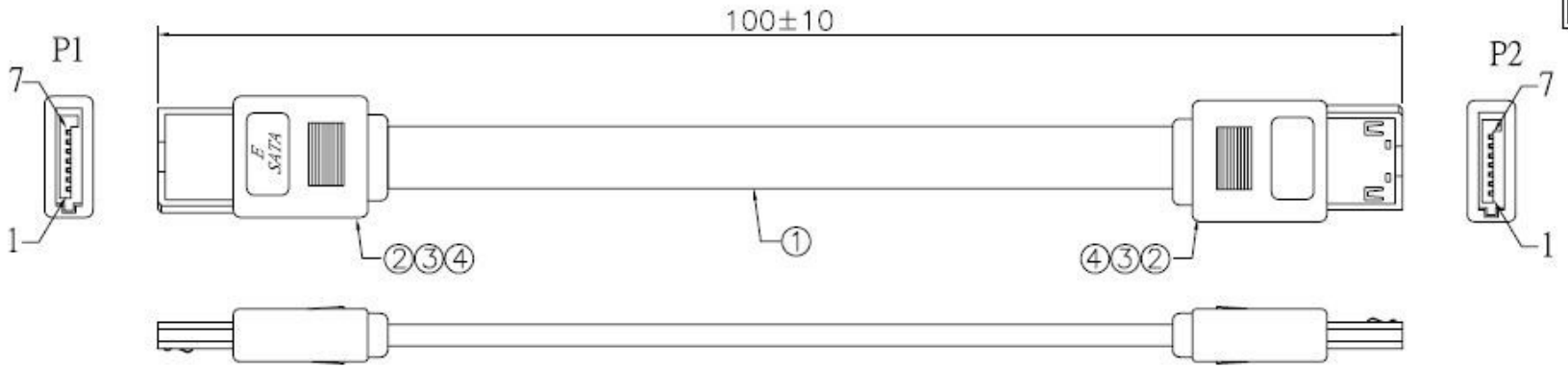

Packing:

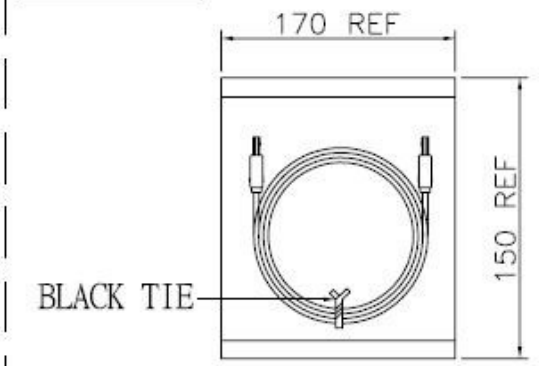

NO.	P/N	DESCRIPTION	QTY
5	PE Bag	POLYBAG:170*170mm	1 pcs
4	Molding	OVERMOLD PVC 35P , BLACK	1 pcs
3	Molding	INNER MOLDING:PE TRANSPARENTLY	1 pcs
2	Connector	EXTERNAL SATA-1 STRAIGHT RECEPTACLE CRIMP CONNECTOR	2 pcs
1	Cable	ROUND UL2725 [(1/26AWG*2C+AL/MYLAR)*2+3E+AB],PVC,BLACK(TCCI)	1 pcs
		ROUND UL2725 [(1/26AWG*2C +AL/MYLAR)*2+3E+AB],PVC,BLACK	1 pcs

Pin Assignment:

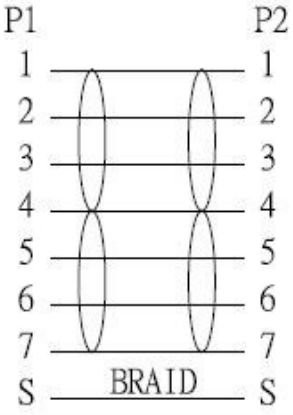

P/N	SATA 1 7P/SATA 1 7P 10CM			
Item	AFA15160010			
Drawn By	Cindy	Customer NO.	DM64	N
Audited By			Unit : mm	
Date	2007-12-14		Rev. : 1.00	ME