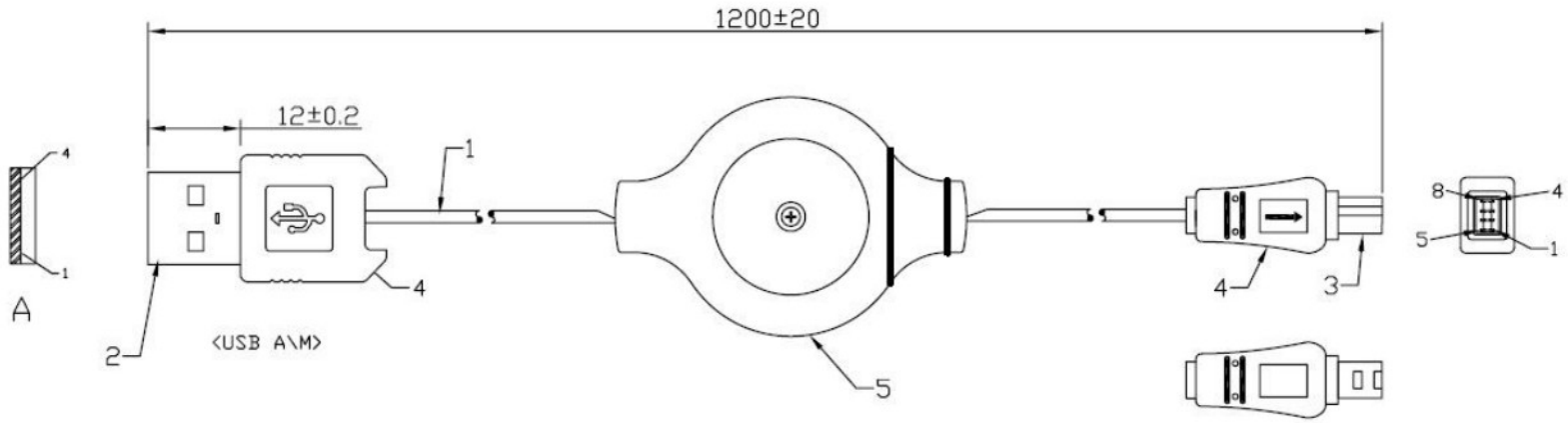


ROHS

PIN ASSIGNMENT

| AM | | MINOLTA | | COLOR |
|---|---|---|---|---|
| 1 | —— | 7 | —— | RED |
| 2 | —— | 3 | —— | GREEN |
| 3 | —— | 4 | —— | GRAY |
| 4 | —— | 8 | —— | GRAY |

| NO. | DESCRIPTION | Q'TY |
|---|---|---|
| 1 | CABLE:28AWG(30/0.08)*2C+32AWG(11/0.05)*1P OD:1.2*3.2mm JACKET COLOR:BLACK | 1 |
| 2 | USB A TYPE MALE SHELL PLATED:NICKEL CONTACT:GOLD FLASH | 1 |
| 3 | MINOLTA 8P CONNECTOR PLATED:NICKEL | 1 |
| 4 | 55P PVC BLACK IN COLOR | |
| 5 | RECTRACTABLE MADE OF ABS BLACK IN COLOR(2.0BIG) | 1 |

| REV. | DESCRIPTION | DATE |
|---|---|---|
| A | USB RECTRACTABLE | 07/3/22 |

UNLESS OTHERWISE SPECIFIED TOLERANCE
ANG. ±5'
0. ±0.5
.0 ±0.3
.00 ±0.2

| | | | |
|---|---|---|---|
| SCALE: NONE | UNIT: mm | DRAWN NAME: | 競捷EX65 |
| DRAWN CJB | 07/3/22 | | |
| CHECKED | / / | | |
| APPROVED | / / | PRODUCT NO. | USB2-MINOLTA-120-R |
| SIZE A4 | REV. A | FILE NAME: | USB2-MINOLTA-120-R |