BUY ON
www.cablematic.com

Rev	Modification Content	Date	Validate
A	the First Edition	2018-10-12	MYY

ROHS

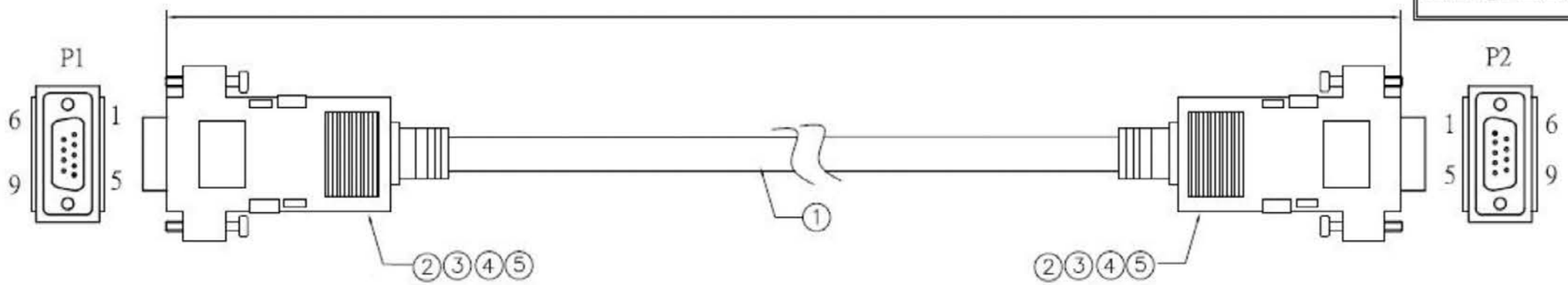

ITEM:ARA0920920010300
QTY: ** PCS
NW: ** KGS
GW: ** KGS
SIZE:46*30*23CM

ARA0920920010300
25PCS

Packing:

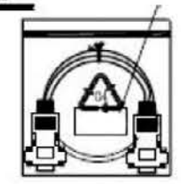

1.
2. :150*200*0.05;
3.25

1. : 20
2. : 2Ω
3. : DC 300V AC300V
4. : 0.6
5. : 4/sec

Pin Assignment:

P1	P2
1	1
2	2
3	3
4	4
5	5
6	6
7	7
8	8
9	9
S	S

NO.	P/N	DESCRIPTION	QTY
5		#4-40UNC L=12.7MM	4 pcs
4		DB9P BEIGE	2 set
3		45P PVC BEIGE(同B088-009-0004)	g
2		D-SUB 9	2 pcs
1		UL 2464 28AWG*9C (7/ , OD:5.0mm JACKER:BEIGE	1 pcs

P/N	DB9 F/F		
Item	ARA0920920010300		
Drawn By	MYY	Customer NO.	NO
Audited By			Unit : mm
Date	2018-10-12	Rev. : A	1/1

BUY ON
www.cablematic.com