REV.	REMARK	DATE	SIGN.

buy on www.cablematic.com

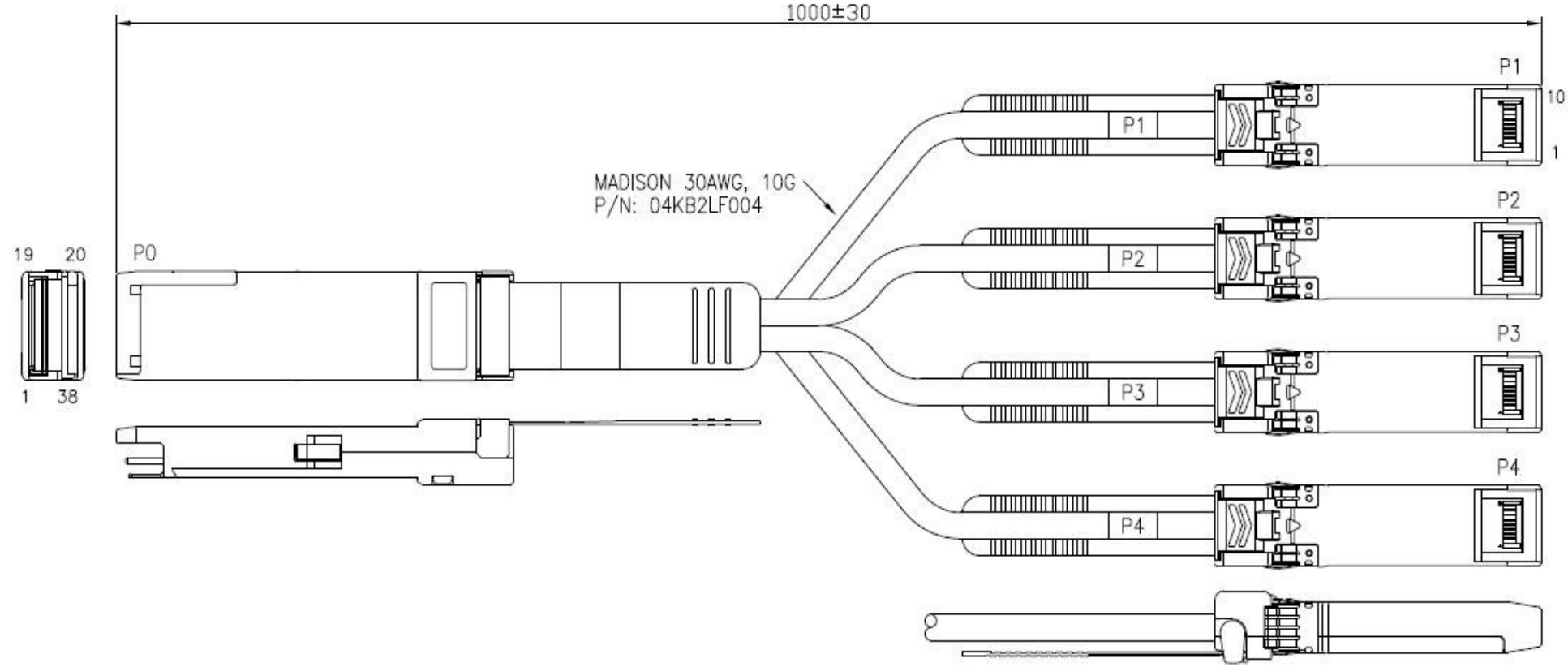

MATERIAL RoHS COMPLIANT:

1.CABLE:
- CONDUCTOR: 30 AWG SOLID SILVER PLATED COPPER.
- INSULATION: FOAM POLYOLEFIN, COLOR – NATURAL.
- PAIR: 2 SINGLES LAID FLAT AND PARALLEL.
- CORE: 2 PAIRS
- PAIR DRAIN: 30 AWG SOLID SILVER PLATED COPPER.
- PAIR SHIELD: ALUMINUM/POLYESTER TAPE, ALUMINUM SIDE FACING IN.
- INNER SHIELD: ALUMINUM/POLYESTER/ALUMINUM TAPE, 25% OVERLAP.
- OUTER SHIELD: 38 AWG TIN PLATED COPPER BRAID, 85% COVERAGE.
- JACKET: XPBT, COLOR – BLACK.
- DIAMETER: 4.445±0.254 MM
- DIFFERENTIAL IMPEDANCE: 100 ± 5 OHM @TDR.
- PRINTED LEGEND: "MADISON CABLE (UL) TYPE CL2 75°C 30 AWG CSA AWM II A/B 75C 30V FT4 TurboTwin™ 10G 101-6869 RoHS COMPLIANT {D/C}"
- APPROVAL: UL TYPE CL2 AS SPECIFIED IN ARTICLE 725 OF THE NATIONAL ELECTRICAL CODE.

2.CONNECTOR:

P0: 4x-Pluggable-QSFP(SFF-8436)
- (1) P.C.B: 4 LAYERS, GOLD PLATING ON CONTACT PADS.(SPCB-040078A, AC Coupling)
- (2) LATCH: STAINLESS STEEL WITH PULL TAB.
- (3) BACKSHELL: ZINC DIE CASTING HOOD/ NICKEL PLATING.

P1-P4: SFP+ MODULE (SFF-8431)
- (1) HOOD: ZINC DIE CASTING, NICKEL PLATING.
- (2) LATCH: PC RESIN UL94V, COLOR IN BLACK.
- (3) P.C.B: 4 LAYERS, GOLD PLATING ON CONTACT PADS.(SPCB-040077A, AC Coupling)
- (4) SERIAL ID IC: ATMEL AT24C02B OR EQUVALENT.
- (5) PULL TAB: NYLON, UL94V-0, COLOR: WHITE.

DESC.	QSFP TO 4*SFP+ PASSIVE CABLE ASS'Y			APPROVED	CHECKED	DESIGNED	TOLERANCE	SCALE	*	UNIT	mm
P/N	UASS-RC005512	CUSTOMER P/N				Sino		DATE	06/19/'12	DWG NO:	DWG\RC\5512

REV.	REMARK	DATE	SIGN.

buy on www.cablematic.com

Wiring Diagram

High Speed Signal				
P0(4x-Pluggable-QSFP)			SFP+		
Pad	Signal		Pad	Signal	
36	TX1p	⊣⊢	13	RX+	P1
37	TX1n	⊣⊢	12	RX-	
18	RX1n	⊣⊢	19	TX-	
17	RX1p	⊣⊢	18	TX+	
GND Group	GND	—	GND Group	GND	
03	TX2p	⊣⊢	13	RX+	P2
02	TX2n	⊣⊢	12	RX-	
21	RX2n	⊣⊢	19	TX-	
22	RX2p	⊣⊢	18	TX+	
GND Group	GND	—	GND Group	GND	
33	TX3p	⊣⊢	13	RX+	P3
34	TX3n	⊣⊢	12	RX-	
15	RX3n	⊣⊢	19	TX-	
14	RX3p	⊣⊢	18	TX+	
GND Group	GND	—	GND Group	GND	
06	TX4p	⊣⊢	13	RX+	P4
05	TX4n	⊣⊢	12	RX-	
24	RX4n	⊣⊢	19	TX-	
25	RX4p	⊣⊢	18	TX+	
GND Group	GND	—	GND Group	GND	
GND Group: 01,04,07,13,16,19 20,23,26,32,35,38		—	P1~P4 GND Group: 01,02,06,08,10, 11,14,17,20		
Connector Shell		—	P1~P4 Connector Shell		

*DC Blocking Caps on P0-P4 Rx Side.

Low Speed Signal & Power	
P0(4x-Pluggable-QSFP)	
Pad	SIGNAL
08	ModSelL
09	ResetL
10	VccRx
11	SCL
12	SDA
27	ModPrsL
28	IntL
29	VccTx
30	Vcc1
31	LPMode

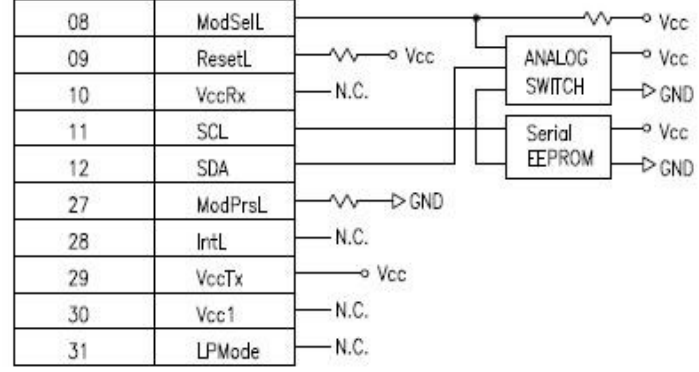

Low Speed Signal & Power	
P1-P4(SFP+)	
Pad	Signal
03	TX_Disable
04	SDA
05	SCL
07	RS0
09	RS1
15	VCCR
16	VCCT

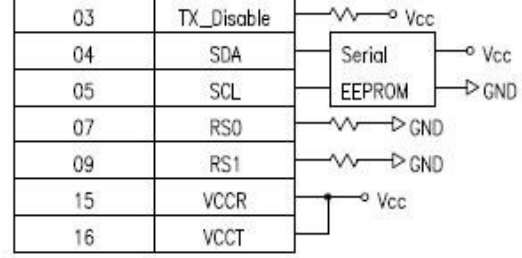

DESC.	QSFP TO 4*SFP+ PASSIVE CABLE ASS'Y		APPROVED	CHECKED	DESIGNED	TOLERANCE	SCALE	*	UNIT mm
P/N	UASS-RC005512	CUSTOMER P/N			Sino		DATE	06/19/'12	DWG NO: DWG\RC\5512