Rev	Modification Content	Date	Validate
A	the First Edition	2008-08-22	Cindy

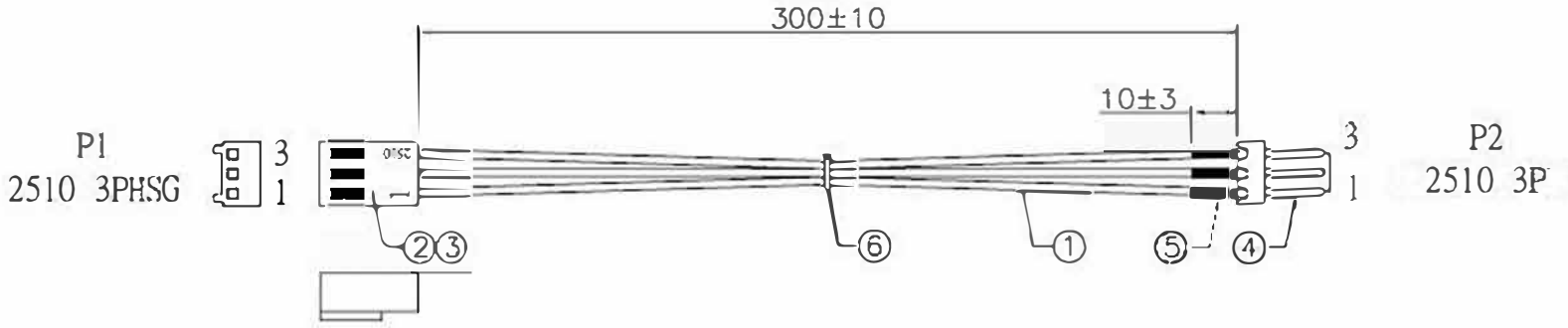

Pin Assignment:

P1		P2
1	BLACK	1
2	RED	2
3	YELLOW	3

NO.	P/N	DESCRIPTION	QTY
6	Tie	TRANSPANCE TIE	1 pcs
5	H.S.T	BLACK H.S.T OD:1.5 L=15mm	3 pcs
4	Connector	2510 3P	1 pcs
3	Terminal	2510 TINNED TERMINAL	3 pcs
2	Housing	2510 3P WHITE HOUSING	1 pcs
1	Cable	UL1007 26AWG COLOR:BLACK/RED /YELLOW	3 pcs

P/N	2510i 3P /2510 3PHSG 30CM			
Item	HJ-141-CA36			
Drawn By	Cindy	Customer NO.	NO	N
Audited By			Unit : mm	
Date	2008-08-22		Rev. : 1.00	ME