WEIGHT	CUSTOMER NO:	REMARK
200g-K7	UA01	Cablematic

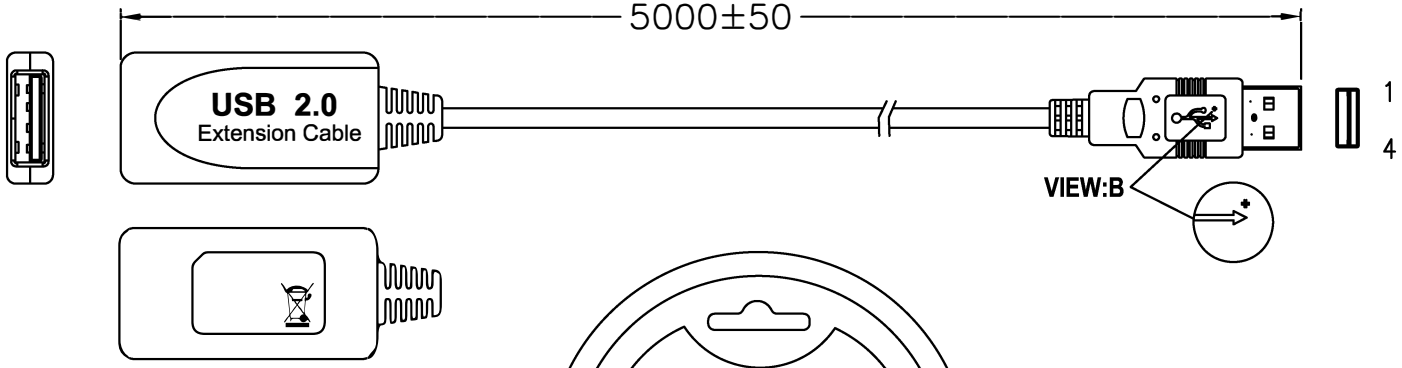

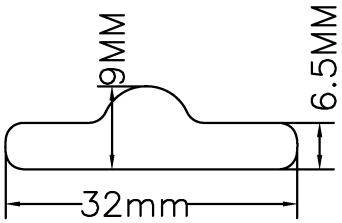

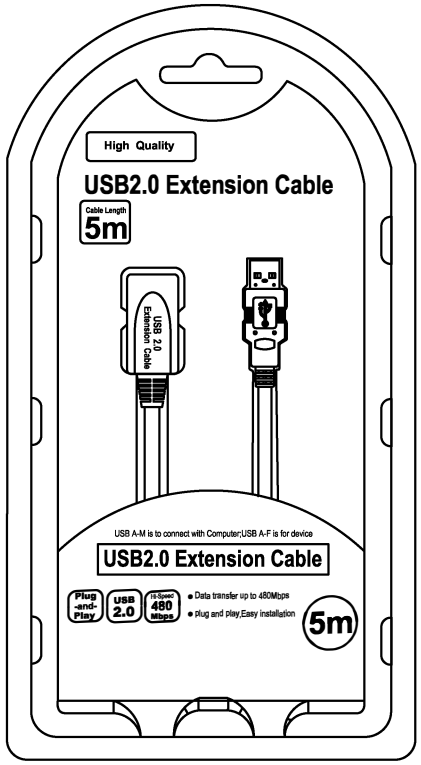

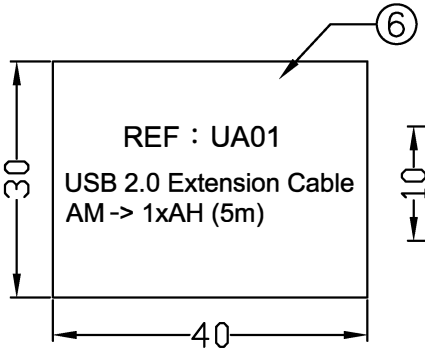

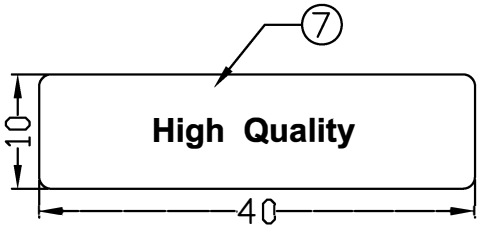

REV.	ECR	DESCRIPTION	C.N.	DATE
A		FRIST EDITION	WUZAN	03/01/2011

THESE DRAWINGS AND SPECIFICATIONS ARE THE PROPERTY OF WIRETEK COMPUTER LIMITED AND SHALL NOT BE REPRODUCED COPIED OR USED IN ANY MANNER WITHOUT THE PRIOR WRITTEN CONSENT OF WIRETEK COMPUTER LIMITED.

UNLESS OTHERWISE SPECIFIDE:
DIMENSIONS ARE IN MILLIMETERS
ANGULAR TOLERANCE: ±1.0°

DIMENSIONS	TOLERANCE
0.00 TO 30.00mm	±0.10mm
30.01 TO 80.00mm	±0.13mm
80.01 TO 150.00mm	±0.15mm
150.01mm ↑	±0.20mm
MATERIAL	
FINISH	

TITLE: USB2.0 EXTENSION CABLE

CHKD.	CONF.
DR. WUZAN	APPD.

PART NO. 2180-2859

SCALE	SHEET	UNIT	SIZE	REV.
	1/1	MM	A4	A