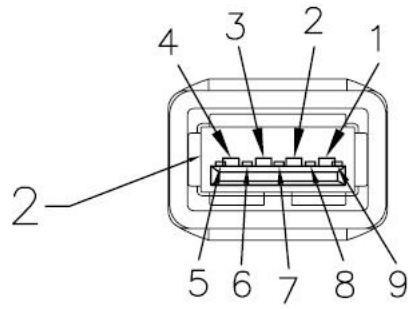

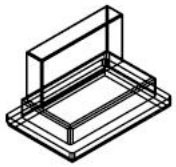

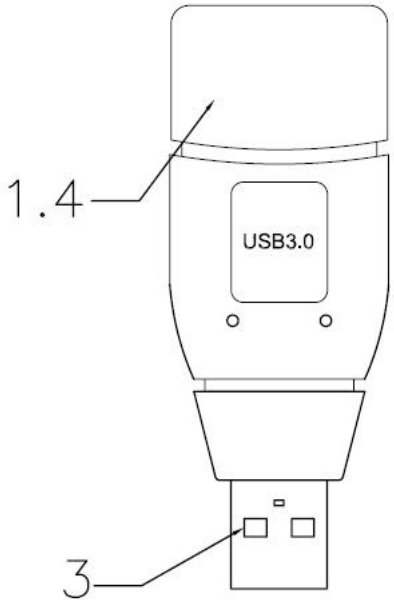

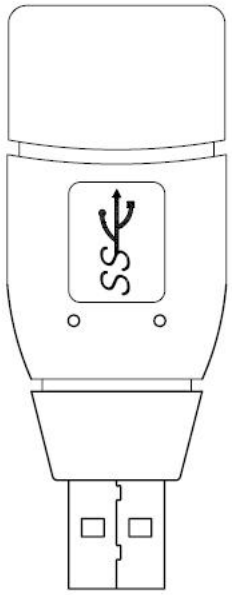

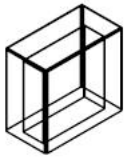

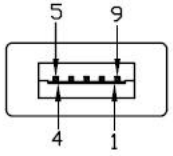

USB3.0 AM		USB3.0 AF	COLOR
1	——	1	—— RED
2	——	2	—— WHITE
3	——	3	—— GREEN
4	——	4	—— BLACK
5	——	5	—— YELLOW
6	——	6	—— BLUE
7	——	7	—— DRAIN
8	——	8	—— ORANGE
9	——	9	—— PURPLE
SHELL	——	SHELL	—— BRAID

ELECTRICAL PROPERTIES:

1. 100% OPEN SHORT MIS-WIRE TEST
2. Contact Resistance:10ohm
3. Insulation Resistance:5Mega ohm
4. Hipot test:300V/10ms

4	55P PVC MOLDING BLUE IN COLOR		
3	USB3.0 A TYPE MALE SOLDER SHELL PLATED:NICKEL CONTACT:30U"	1	pcs
2	USB3.0 A TYPE FEMALE SOLDER SHELL PLATED:NICKEL CONTACT:30U"	1	pcs
1	INTERNAL WIRES;UL1007 30AWG 7STRAND L:17MM		

REV.	DESCRIPTION	DATE
A		10/09/23

UNLESS OTHERWISE SPECIFIED TOLERANCE
ANG. ±5°
0. ±0.5
.0 ±0.3
.00 ±0.2

SCALE: 1:1	UNIT: mm		
DRAWN Steven	10/09/23	DRAWN NAME:	
CHECKED Eric	10/09/23	競捷-UY02	
APPROVED		PRODUCT NO.	
	SIZE A4	REV. A	FILE NAME: