19” Rack cabinets

FF01 15U, 22U, 27U, 32U, 37U, 42U, 600*600, 600*800 series

User’s manual

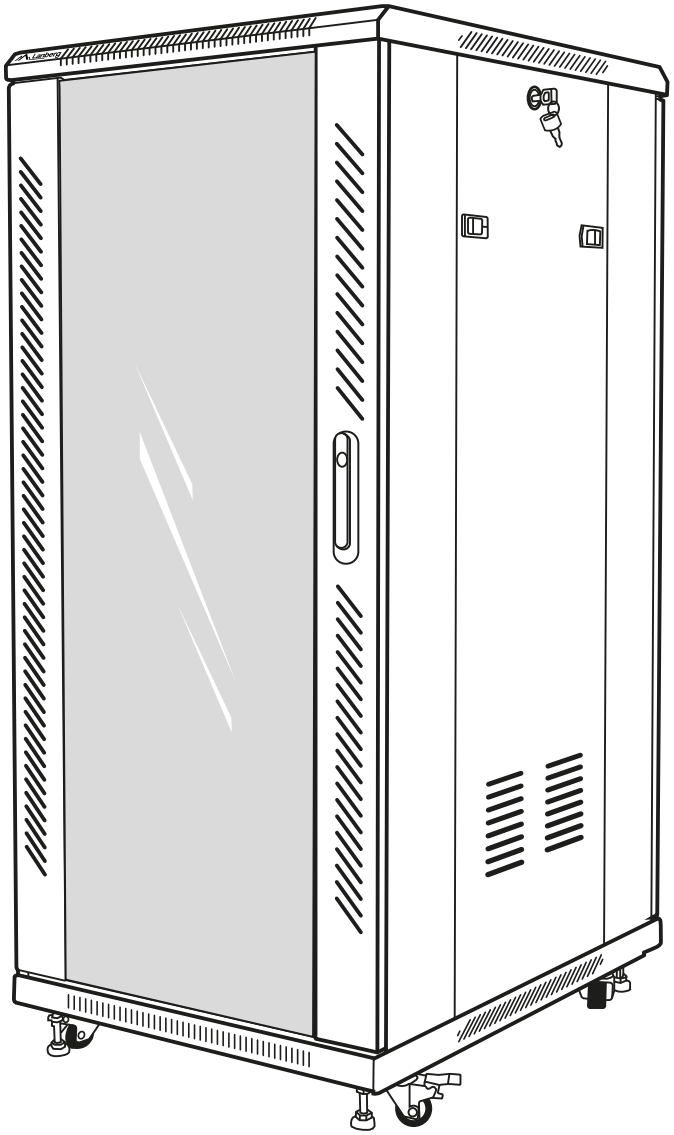

2021/08

1. Important introductory recommendations and usage information

1.1 Introduction

Manual also contains logistic and technical data, instructions, and regulations that must be observed and complied with during transport, assembly, use, and potential maintenance of the products. Under no circumstances should you use the device before carefully reading and fully adapting to all information in the user's manual. Keep this manual for future reference. All photos, illustrations contained in the instructions are for reference only. The information contained in this manual has been verified and is considered sufficient. The supplier is not responsible for any inaccuracies that may be included in this document, nor is he responsible for updating or keeping the current information in this manual, nor for notifying its users or organization about the updates. In particular, Lanberg owners are not responsible for any equipment, software, or data stored/used with the product, including maintenance, replacement, integration, installation, or recovery of hardware, software, or data in the event of misuse of the product or its components.
Lanberg brand owners reserve the right to make changes to this manual at any time without notice. The products mentioned in this manual, including the documentation, are the property of the Lanberg brand owners and its licensors. Any use or reproduction of these products, including documentation, is prohibited, except as expressly authorized under the appropriate license terms.
NOTE: For the most up-to-date version of this manual, please visit our website at www.lanberg.eu.

1.2 Compliance with legal and regulatory provisions regarding safety and the environment

This product complies with EU safety and environmental regulations.

The products listed in the following instructions have been approved for trading within the EU, by obtaining a European Union Declaration of Conformity, which contains a declaration with the essential requirements and other relevant provisions of the following Directives, and that the following harmonized standards have been applied.

Directive: RoHS 2011/65/UE + 2015/863/UE
Standards: IEC 62321-4:2013 + A1:2017; IEC 62321-5:2013;
IEC 62321-6:2015; IEC 62321-7-2:2017; IEC 62321-8:2017;

With the development of products and updates to CE regulations, the declaration may change. The latest declaration of conformity (CE) can be found at: www.lanberg.eu.

NOTE: The use of the WEEE symbol (crossed-out wheelie bin symbol) means that this product cannot be treated as household waste. Proper disposal of used equipment avoids risks to human health and the environment, resulting from the possible presence of hazardous substances, mixtures, and components in the equipment, as well as improper storage and processing of such equipment. The selective collection also allows you to recover materials and components, from which the device was manufactured. For more information about the recycling of this product, please contact the retail outlet, where the product was purchased, or request information from the local authority.

1.3 General safety precautions

- The device specifications must be strictly observed when using the product and connecting it to any external products. The specifications of the external devices to which this device is to be connected must also be observed.
- The product cannot be used outside of the rated values in its specification. The warranty does not cover any damage caused by a deviation from these values when using the device.
- All installations, connections, cabling, and circuits in which the product will be used must be made in a manner consistent with locally applicable electricity regulations and in such a way as to eliminate the risk of people walking or tripping over them. Use only power cables with VDE and CE certification when connecting them to the device. It is necessary to use the same procedures mentioned in this section when connecting the cabling to the product or to the external components.
- For external devices connected to this product, the operating instructions supplied by their manufacturer must be strictly observed.
- To ensure safety and compliance of the device, use only components or parts that meet the specifications or are recommended by the manufacturer.
- During the warranty period, it is forbidden to replace any elements of the product by its users. Maintenance should be entrusted only to qualified technical personnel, such as the manufacturer's technical department or an authorized importer.
- If it is necessary to perform maintenance of the device, it should be carried out or supervised by a person having appropriate qualifications and technical knowledge about the device, while maintaining proper precautions. All this under the local regulations in force.
- If it is necessary to perform maintenance of the equipment or similar activities that will require opening the device or contact with elements that may be under potential voltage, the following safety rules should be observed before carrying out these activities: remove all bracelets, necklaces, rings, watches or other metal hand and neck objects and use tools with insulated handles.
- Always before performing the equipment maintenance, there should be a person nearby who would react and take appropriate steps to assist the person in charge of the device maintenance in the event of an accident. A person undertaking the maintenance should always wash hands after finishing his / her work.
- NEVER allow a situation where sparks or flames could occur near the device. The aftermath of such a situation could have very negative consequences for people and things in the vicinity.
- In the event of a fire, immediately and (without unnecessary delay) disconnect the power supply and notify the fire department of the situation by dialing their assigned emergency number in the country of your stay.
- The product is intended for indoor use. Do not rebuild and/or modify the products and/or their components.
- Under no circumstances, other external products are to be introduced (connected to the device), that are non-compliant with the

intended use of that device and/or not intended for that purpose.

- The manufacturer and distributor are not responsible for any damages resulting from improper use and improper handling of the product (not in accordance with this manual).
- Before attempting to attach or disconnect a device, connect or disconnect cables to it in a 19" wall-mount cabinet, please firstly connect all components to a verified and efficient grounding.
- Make sure that all parts assembled from the beginning in 19" wall-mount cabinet, as well as equipment assembled by the user, are properly screwed or unscrewed when disassembly is carried out. It is unacceptable that any elements of the product or constituting its coherence are not correctly fastened/applied or pose a threat by their incorrect isolation from other functioning factors that in contact would cause danger.

1.4 Guidelines for ESD security principles

To prevent damage to the product, system, or electrical components by electrostatic discharge (ESD), it is vital to be properly prepared and to handle device(s) with care. The following measures are generally sufficient to protect the product against ESD:

- Do not use metal straps or wristbands on your hands to prevent static discharge.
- Touch a grounded metal object first before using/performing the maintenance (if possible) of the device.
- When handling electrical equipment, avoid contact with pins, connectors, and any energy relays.
- When moving electronic components, it is recommended to grab only their (isolated) edges, where there is no current flow. Do not touch components, integrated circuits, memory modules, contacts, etc.
- All electronic devices should be placed back into antistatic bags (if possible) when they are not in use.

1.5 Transport

During transport, store the product only in the original packaging to protect against shocks and bumps. Do not throw the packaging in the trash. When shipping a product under warranty, the product must be in its original shipping box.

1.6 Warranty

The warranty does not apply in the event of product failures and defects resulting from improper use and handling of the device (not under this user manual). Mechanical damage is the basis for rejecting a complaint. To correctly submit a warranty claim, contact your retailer.

1.7 Unpacking and examination

In the presence of the carrier, carefully unpack the product from the shipping box and make sure to check whether:

- Contents of the package include all the elements listed in point 1.3.
- All items are undamaged.

In case of absence, damage, discrepancies in the elements contained in point 1.3, a damage report has to be drawn up (if any occurred), and the matter has to be submitted to the seller. The following are required: photographs, batch number, and description of the problem. Indicated actions should be carried out on the same day as the date of product delivery.

1.8 Storage and ventilation

- The product should be installed only in locations with limited access (separate rooms for equipment, etc.).
- Do not install and store the device in places with water (still or running), humidity, or any other liquid substances being present.
- Avoid exposing the product to direct sunlight sources.
- Place the device on a stable, dry surface in a well-ventilated place. Leave at least 100 mm of free space around it to ensure adequate ventilation.
- The device is designed to work only in a controlled environment (controlled temperature and humidity according to the data in the specification, indoors, without conductive pollution present [dust, flammable gases, corrosive substances, etc.]).

2. Assembly Instructions

Be sure to strictly follow the instructions in this manual.

2.1 Preparations

Prepare the appropriate amount of free space on the surface on which the assembly will take place. Carefully remove all elements from the transport box. Further assembly instructions will be based on the diagram provided

2.1.1. Accessory Table

Cabinet parts				
Item No.	**Item name**	**Item drawing**	**Number required**	**Number in set**
Item A	Front glass door		1 pc.	1 pc.
Item B	Back panel		1 pc.	1 pc.
Item C	Side panels		2 pcs	2 pcs
Item D	Frame		2 pcs	2 pcs
Item E	Top cover		1 pc.	1 pc.
Item F	Lower cover		1 pc.	1 pc.
Item G	Crossbar		15U~27U 4 pcs 32U~42U 6 pcs	
Item H	Fan shelf	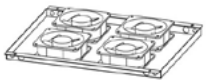	1 pc.	1 pc.
Item I	Mounting rails		4 pcs	4 pcs
Item J	Top panel cap		Flat 3 pcs Grooved 4 pcs	

Item K	Adjustable feet		4 pcs	4 pcs
Item L	Wheels with brakes		4 pcs	4 pcs
Item M	Door stops		15U~27U 8 pcs 32U~42U 12 pcs	
Item N	Front door lock		1 pc.	1 pc.
Item O	Rear panel lock		3 pcs	3 pcs
Item W	Door spacers		2 pcs	4 pcs

Screws				
Item No.	**Item name**	**Item drawing**	**Number required**	**Number in set**
Item P	M8 Flange nuts		16 pcs	17 pcs
Item Q	M8 Allen screw		16 pcs	17 pcs
Item R	M5*10 Self-tapping screws		15U~27U 36 pcs	40 pcs
			32U~42U 44 pcs	50 pcs
Item S	M4*8 Self-tapping screws		15U~27U 20 pcs	23 pcs
			32U~42U 26 pcs	30 pcs
Item T	M6 Snap nut		15U~27U 32 pcs	35 pcs
			32U~42U 48 pcs	50 pcs
Item U	M6x12 Allen screw		15U~27U 32 pcs	35 pcs
			32U~42U 48 pcs	52 pcs
Item V	M6 Additionally screw and nut		20 pcs	20 pcs

3. Assembly stages

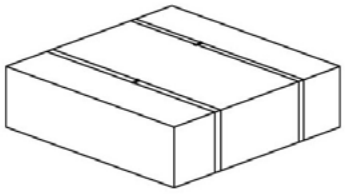

TOP AND BOOTOM PACKAGE 1/3

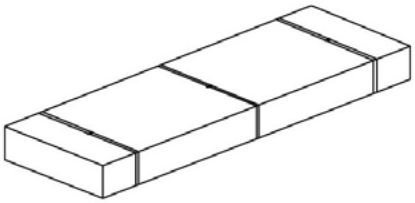

FRONT DOOR, REAR PANEL AND SIDE PANEL 2/3

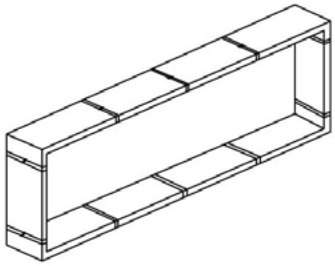

FRAME PACKAGE 3/3

Step 1. Remove the front door lock (item N), the side panel locks and the rear panel lock (item O), the components are in pack 1/3. Then remove the front glass door (item A), back panel (item B) and side panels (item C) from pack 2/3. At this stage we start by fitting locks to the above components.

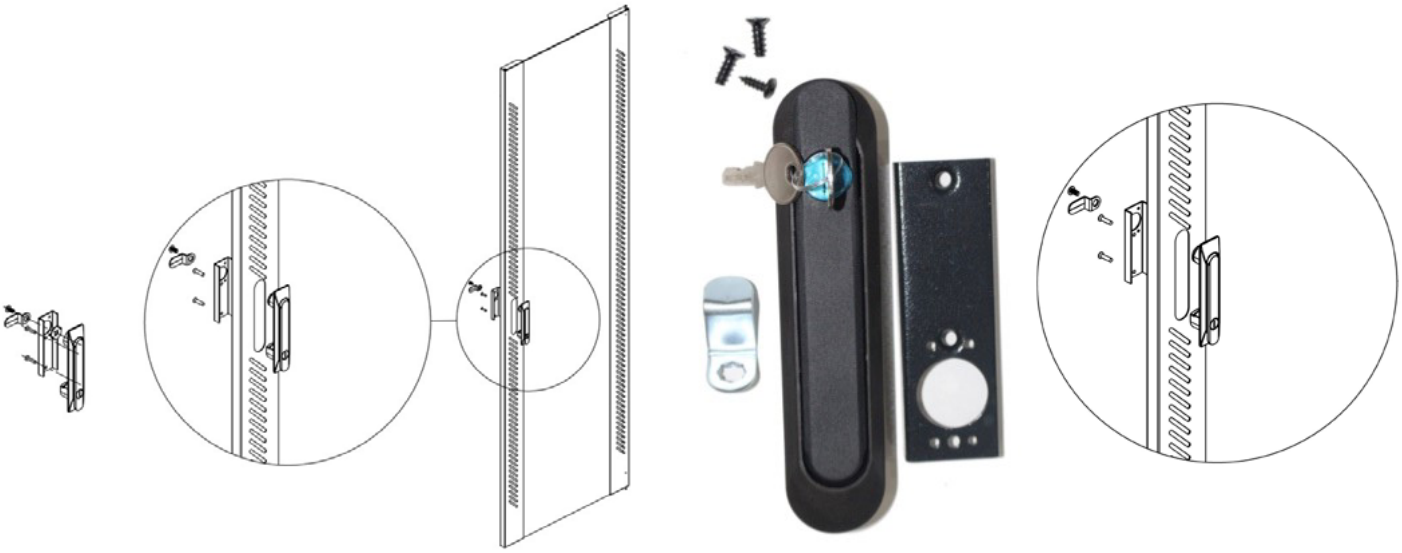

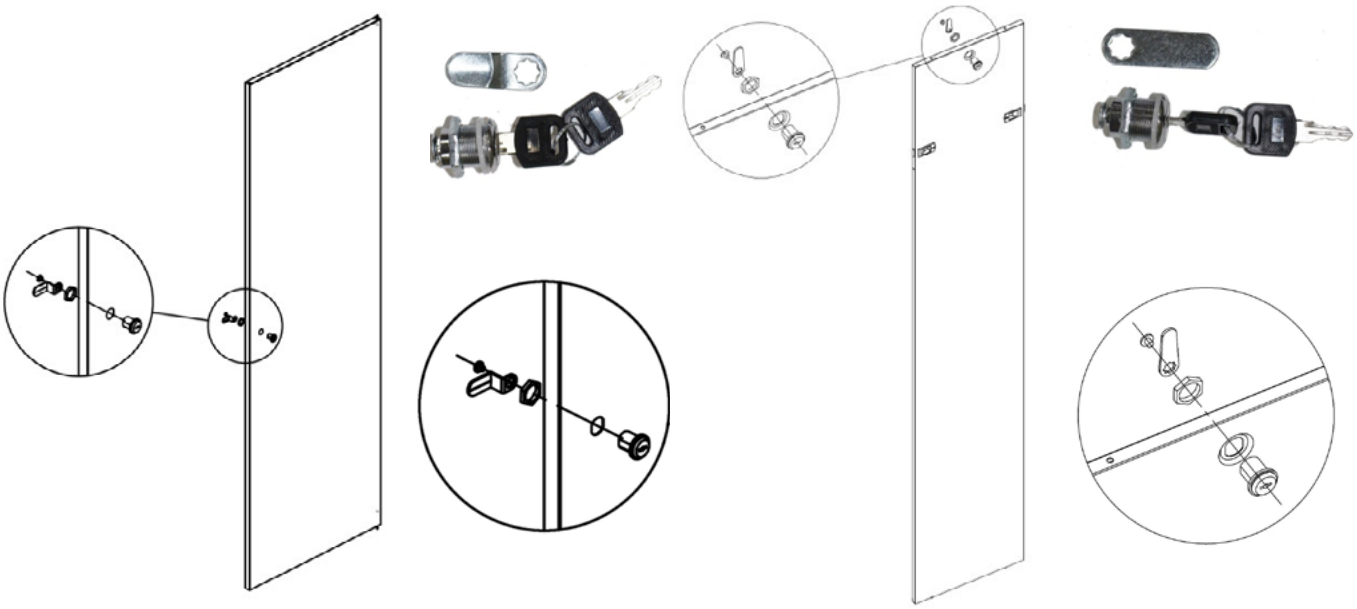

Step 2. Unpack the frame parts (item J) from pack 3/3. Then arrange the frames parallel to each other, with the square holes facing inwards. You can recognize the lower part of the frame by the element for installing the earthing.

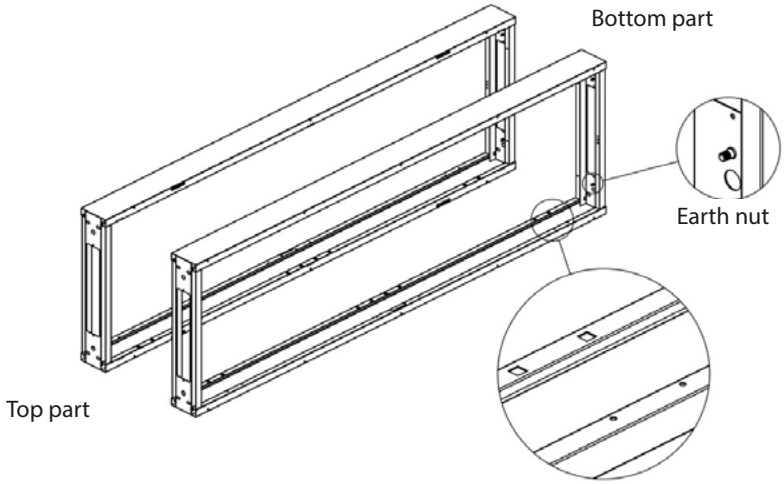

Step 3. Fit the top cover (item E) onto the top parts of the frame (item D), then use an M8 Allen screw (item Q) to assemble them together.

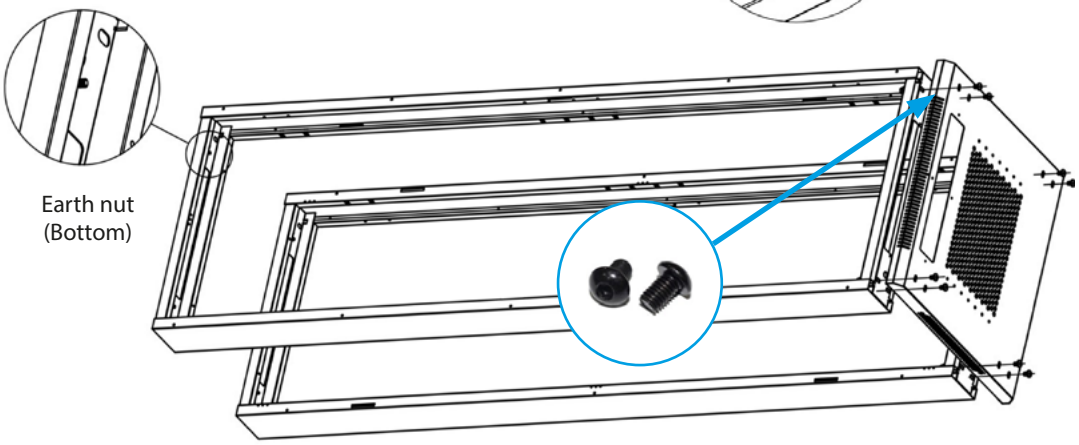

Step 4. Fit the lower cover (item F) onto the lower part of the frame (item D) and then use an M8 Allen bolt (item Q) and M8 flange nuts (item P) to join them together.

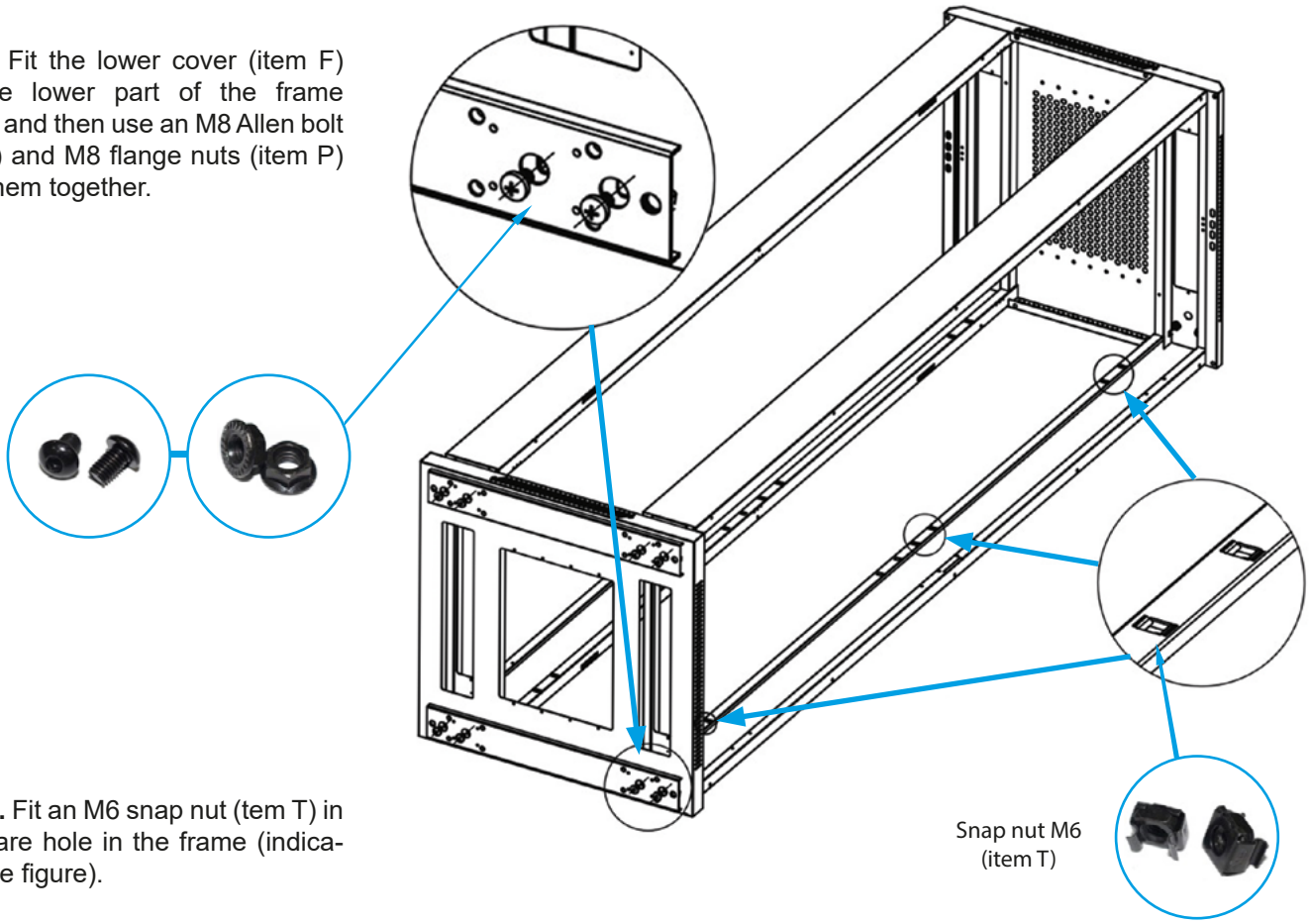

Step 4a. Fit an M6 snap nut (tem T) in the square hole in the frame (indicated in the figure).

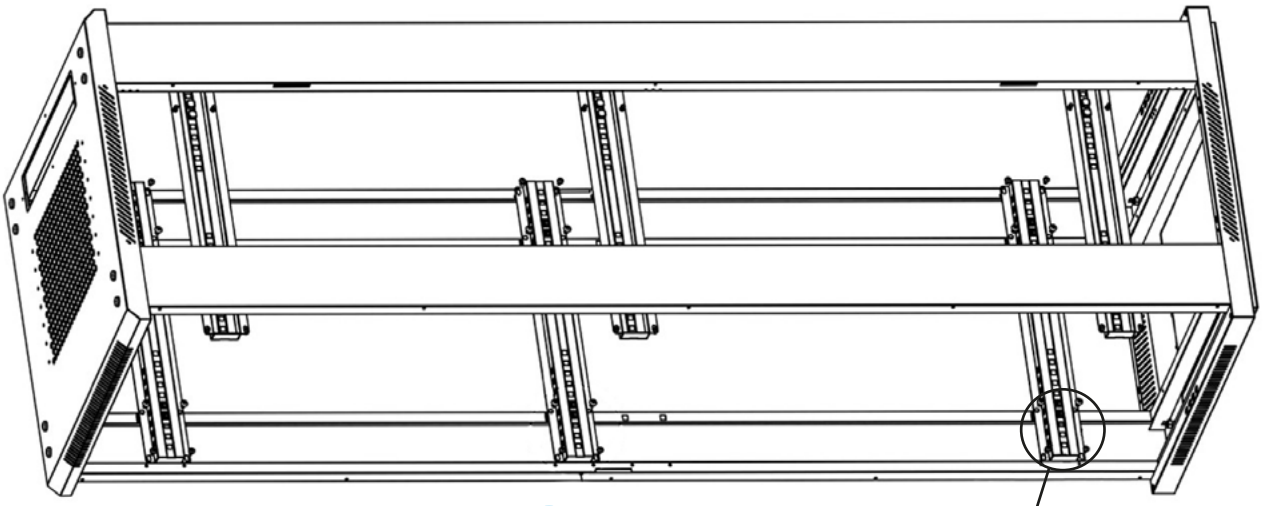

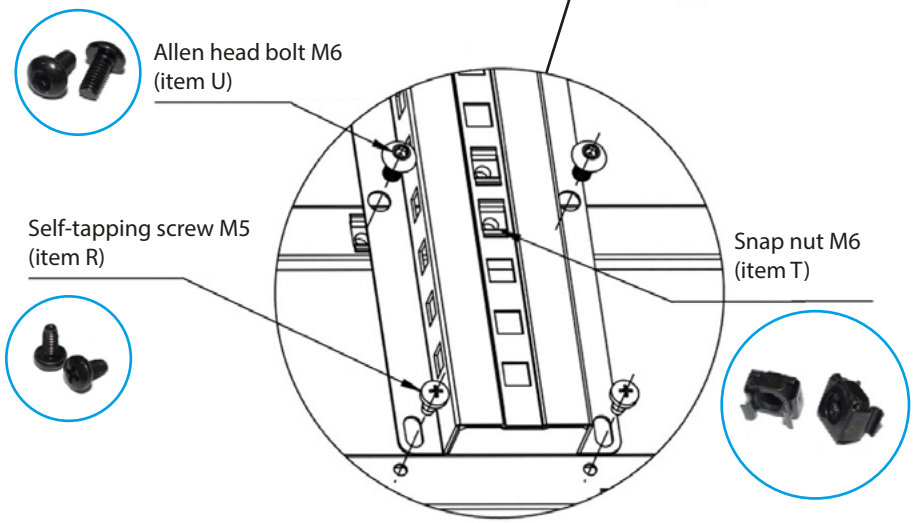

Step 5. Prepare M6 snap nuts (item T) and fix them on the crossbar (item G), then place the crossbar on the frame (item D) avoiding the locking hole in the frame. Use an M6 Allen screw (item U) and an M5 self-tapping screw (item R) to fix the crossbar.

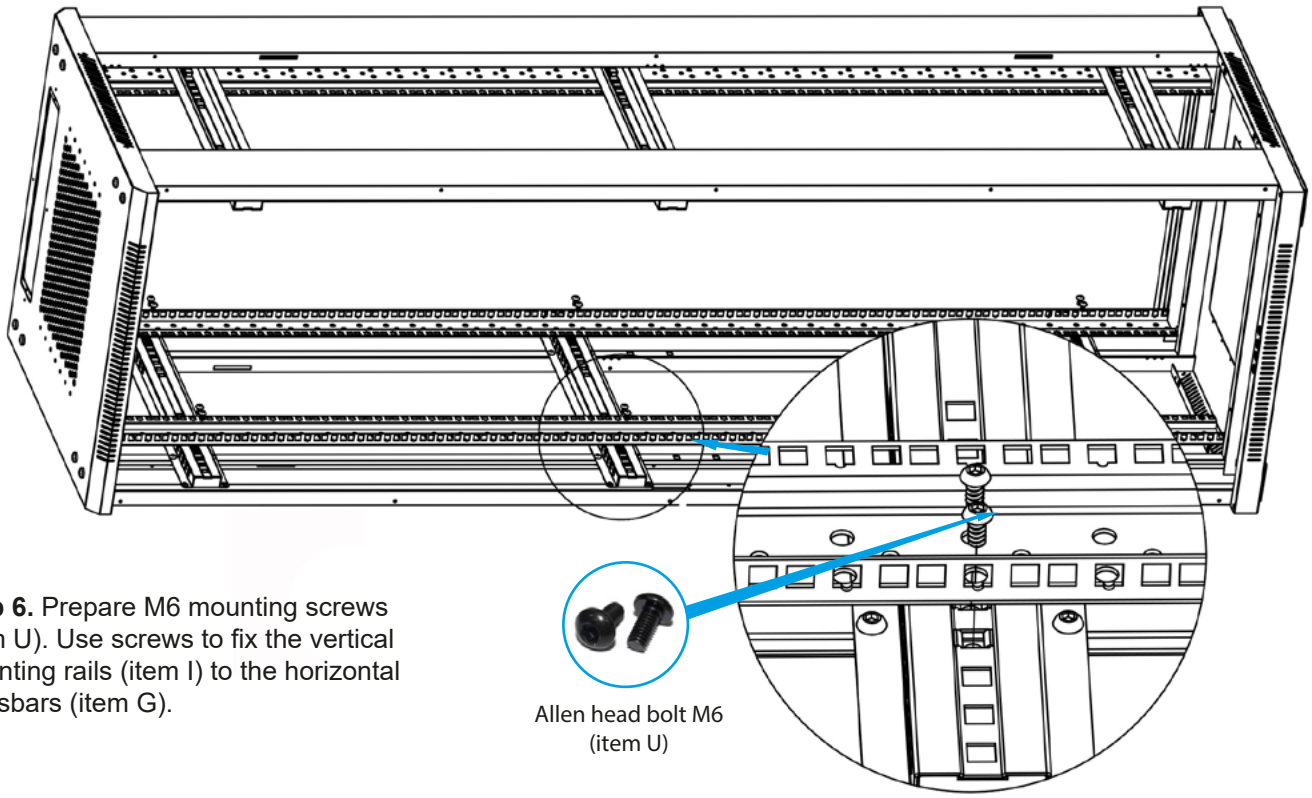

Step 6. Prepare M6 mounting screws (item U). Use screws to fix the vertical mounting rails (item I) to the horizontal crossbars (item G).

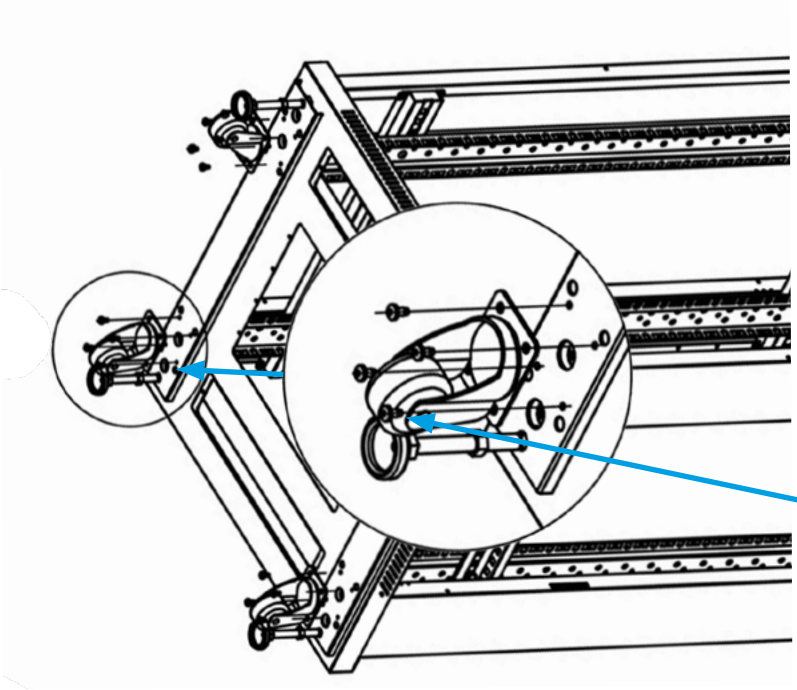

Step 7. Prepare M5 self-tapping screws (item R) to fix the four wheels with brakes (item L) on the bottom cover (item F). Then mount the adjustable feet (item K) to the bottom cover.

Self tapping screw M5 (item R)

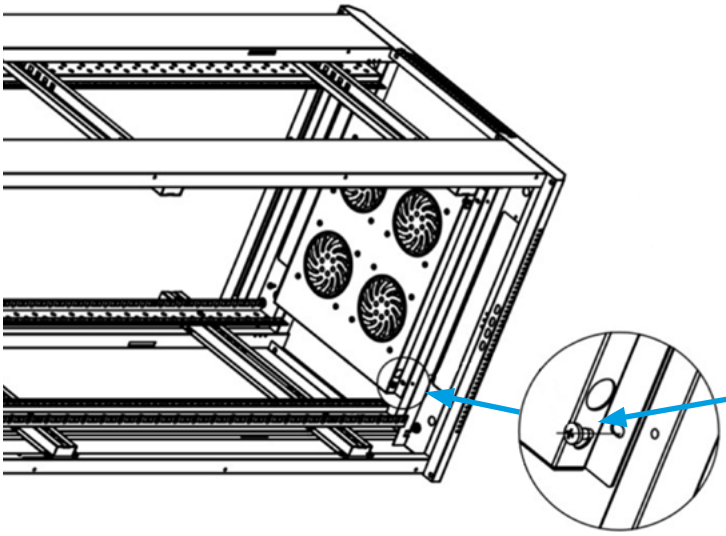

Step 8. Prepare M5 self-tapping screws (item R), then use them to attach the fan shelf (item H) to the RACK frame (item D).

Self tapping screw M5 (item R)

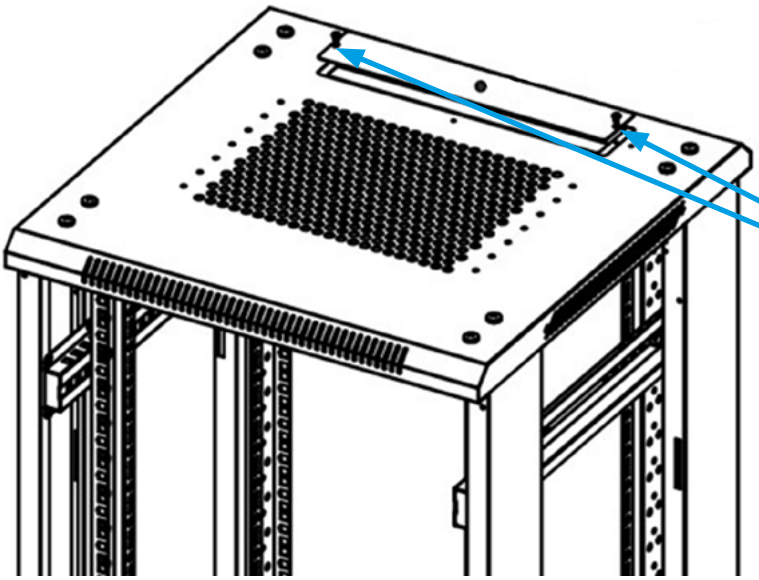

Step 9. Prepare and use an M4 self-tapping screw (item S) to attach the top panel cap (item J).

Self-tapping screw M4 (item S)

Step 10. Prepare and use M4 self-tapping screws (item S) to fix the door stops (item M). For sizes 15U~27U (8 pcs), 32U~47U (12 pcs).

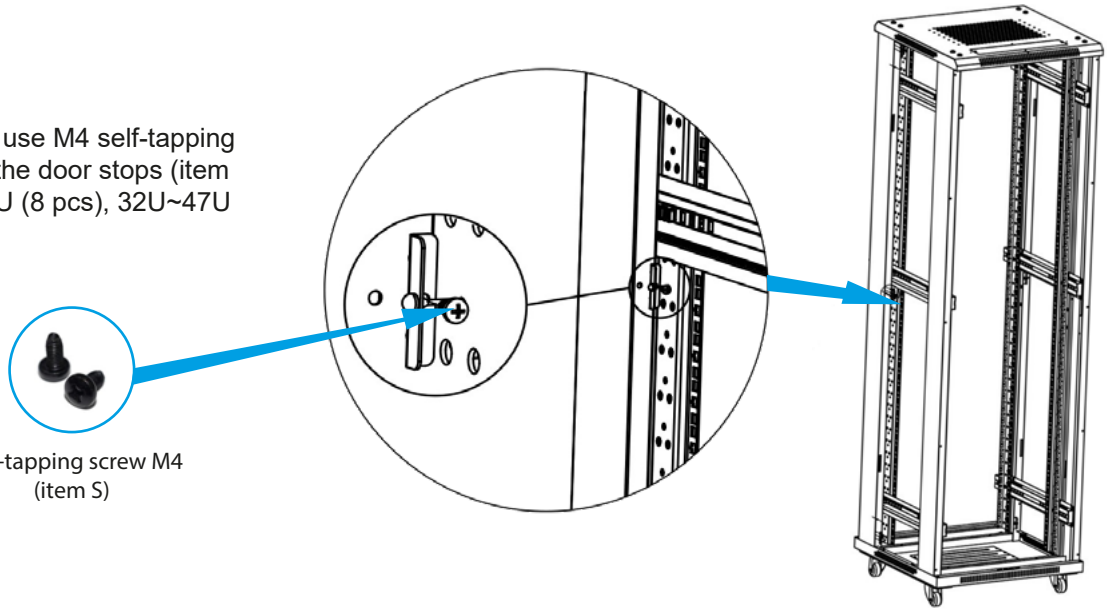

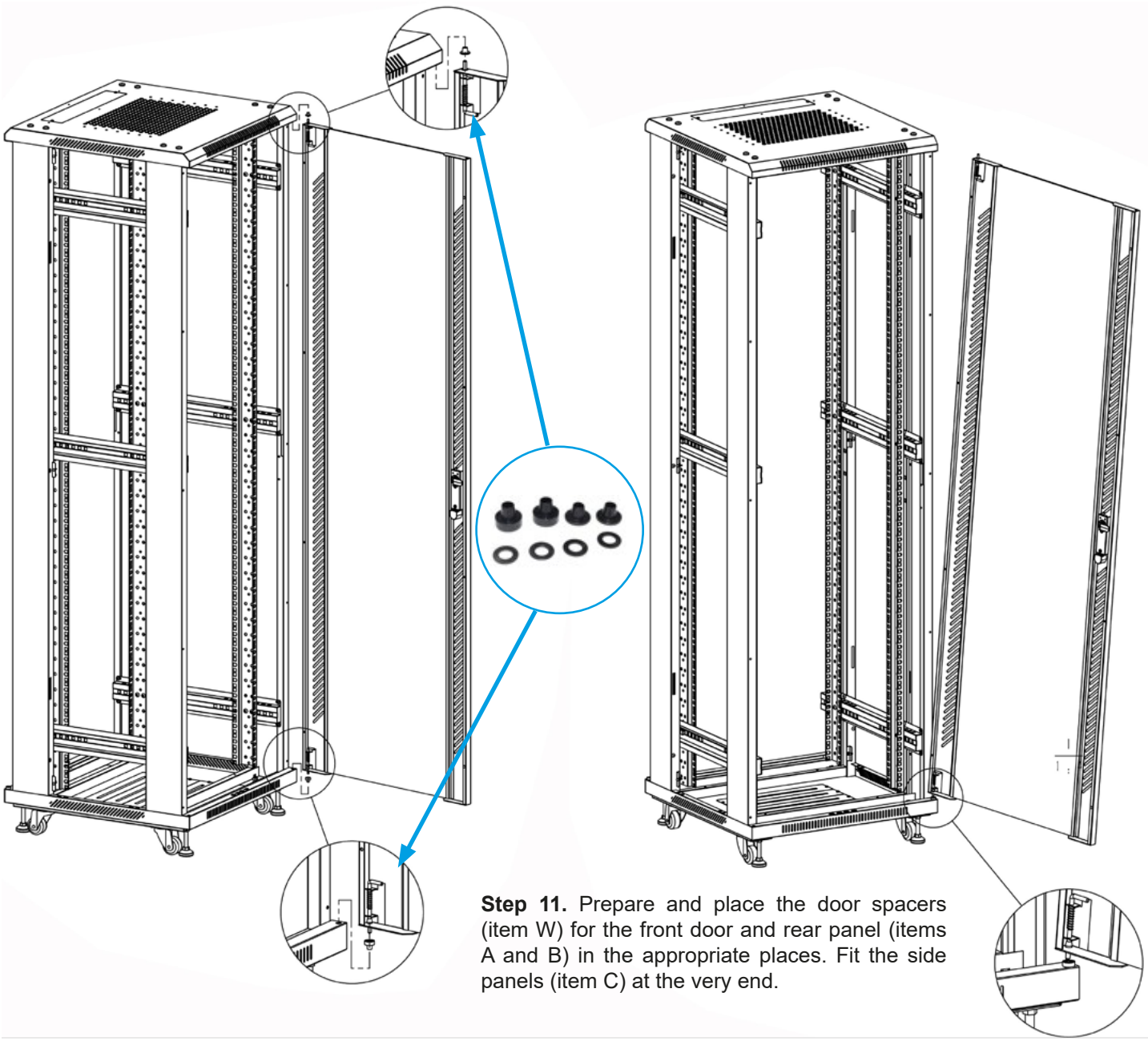

Step 11. Prepare and place the door spacers (item W) for the front door and rear panel (items A and B) in the appropriate places. Fit the side panels (item C) at the very end.