Rev	Modification Content	Date	Validate
A	the First Edition	2007-08-07	Cindy

ROHS

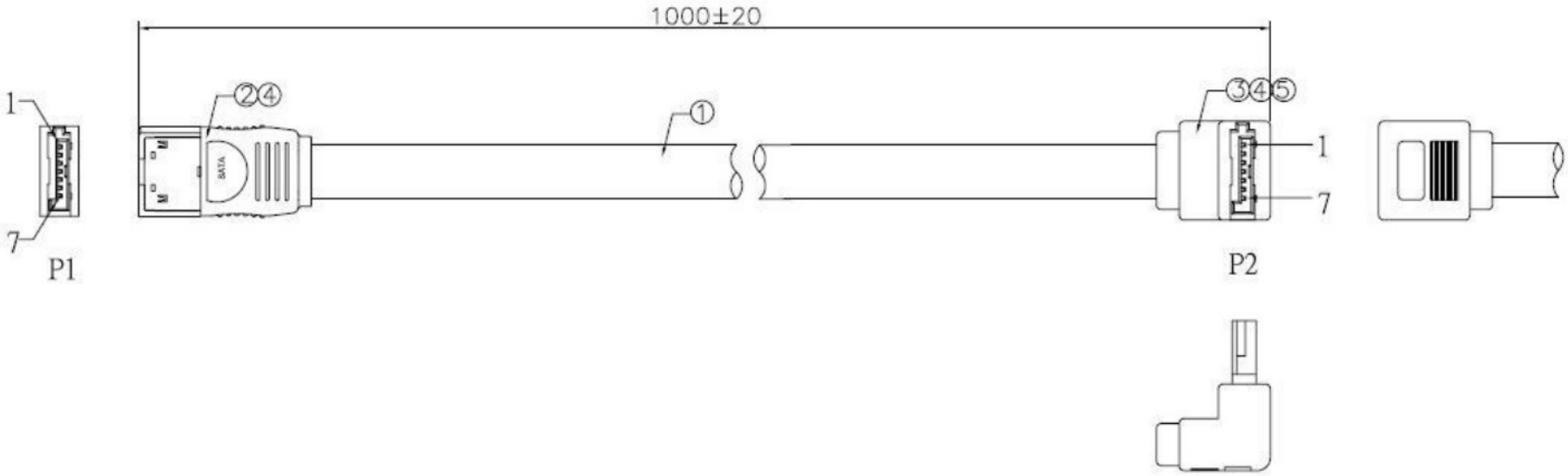

測試要求：

1. 成品需做100%電气測試,不得有任何斷路/短路,錯位,電器閃爍.
2. 絕緣&導通阻抗:5M Ω/Min& 5 Ω/Max .
3. 測試電壓：DC 300V.

DN13

NO.	P/N	DESCRIPTION	QTY
4	Molding	PE料	4 g
3	Molding	PVC 45P COLOR:BLACK	12 g
2	Connector	SATA-II ((3.0Gb/s) 7P FEMALE PIN GOLD FLASH	2 set
1	Cable	UL 2725 SERIAL ATA CABLE(26AWG*1P +28AWG/2D+AL/MY)*2F+BRAID(16/6 /0.1TC), OD=4.0*9.0±0.1mm JACKET:BLACK,印白字	992mm

Pin Assignment:

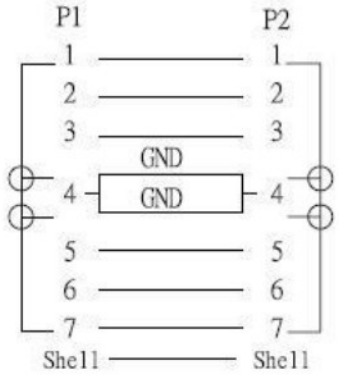

P/N	ESATA CABLE 180°-90°			
Item	HJ-141-070713-03			
Drawn By	Cindy	Customer NO.	NO	N
Audited By			Unit : mm	
Date	2007-08-07		Rev. : 1.00	ME