FILE NO: USB-0945

DESCRIPTION CONTROL			
REV	DESC	DATE	ECN NO.
D	△D	07-10-13	N20710206
E	△E	09-01-08	N20901063

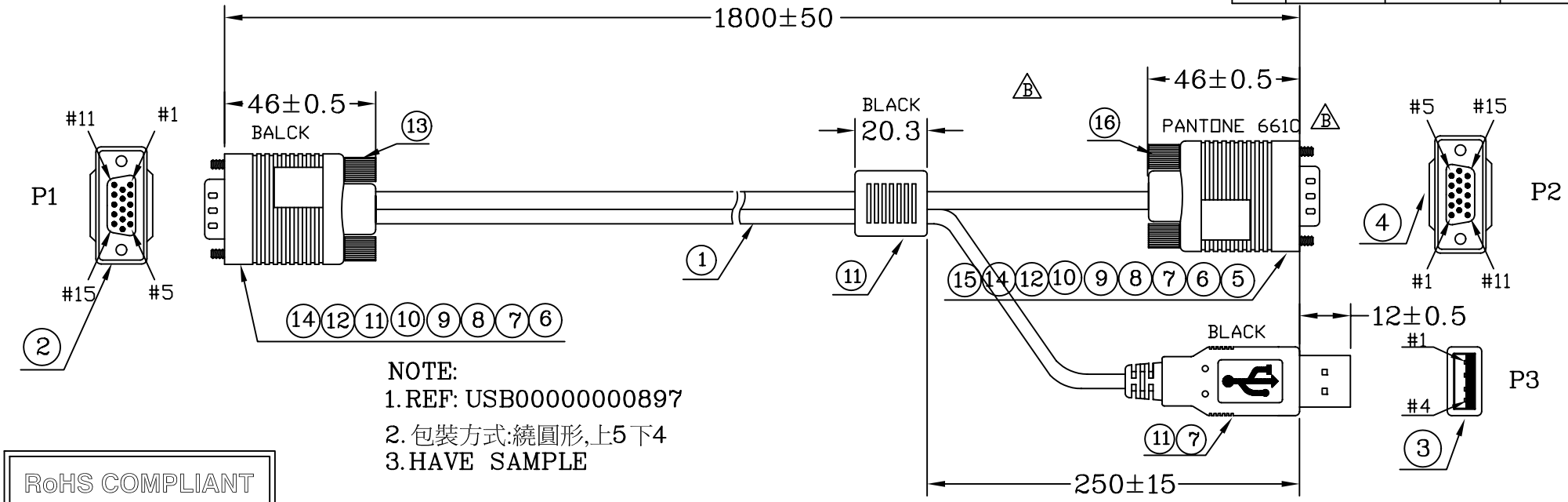

NOTE:
1. REF: USB00000000897
2. 包裝方式:繞圓形,上5下4
3. HAVE SAMPLE

RoHS COMPLIANT

NO	PART NO.	DESCRIPTION	QTY	NUIT
16	240010200097	SRW-Q39.6/PANTONE 661C	2	PCS
15	370	PVC-PANTONE 661C/50P	20	G
14	370	SOL-WIRE-FULL-IN-1.2	2.0	G
13	370	SRW-Q39.6/BLACK/Z2	2	PCS
12	370	FOIL-CU-31MM	55*2	MM
11	370	PVC-BLACK/50P	33	G
10	370	HI TEAMP TAPE:W:24MM	70*2	MM
9	370	PE-5321	10.3	G
8	210	TUBE-HT-Ø3.0MM	8*6	MM
7	220	SOL-WIRE-FULL-TIN-1.0	0.9	G
6	210	TUBE-HT-Ø1.0MM	12*6	MM
5	100500126015	JUMP WIRE-26-1007-2*38*15MM	5	PCS
4	110021115001	CDS-H15P/<BU>	1	PCS
3	110081304001	USB-A-P/L<WH>	1	PCS
2	110021015001	CDS-H15P/<BK>	1	PCS
1	1405111100001 △E	<<1C+DAM>*3C+4C+ADB)*1F+<1P+2C +ADB>*1F,BK10,OD:5.5*4.5<32/30/28 /26>,U20513/U2725 △D	1.8	M

*	390	TIE-A/BLACK	120*1	MM
*	390	CARTON:46*30*20CM △C	1/60	PCS
*	390	PE BAG:30"*28"*0.08MM △C	1/60	PCS
*	390	PE BAG:6"*8"*0.06MM	1	PCS

INNER MOLDING	A'HD1514		
OUTER MOLDING	A'HD1539	USB A-01	SR049

PIN ASSIGNMENT

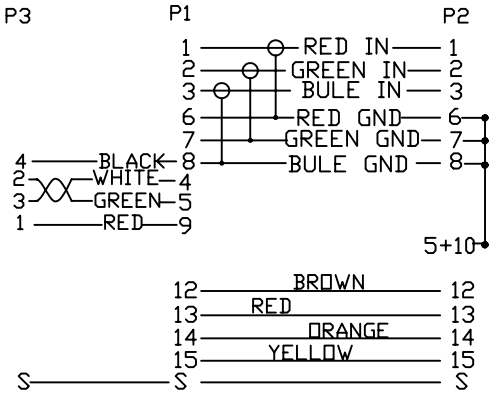

UNICLASS TECHNOLOGY CO., LTD

ITEM: USB000000000945		REV E
DRAW,BY: EMILY	SCALE: NONE	DATE: 05-11-14
CHECK,BY: john	CUSTOMER: C334	PAGE:1/1
APP,BY:	CUSTOMER P/N:	

ALL DIMENSIONS IN mm