Dual Rail Combo CAT6 LCD Console Drawers

Optimize rack space. Maximize rack monitoring

The Annso range of LCD console drawers provides a variety of features that simplify to access servers to making system monitoring, troubleshooting and software upgrades.
Flexible dual rail design, capable LCD screen and keyboard tray operated independently.
The self-locking rails when in the fully extended open position and the ultra-convenient auto lock release when the LCD panel is closed, make for simple and hassle free operation.
Available with 17” or 19” A-Grade LCD panels, Combo CAT6 8, 16 or 32 port integrated KVM switch & with an remote IP console.
Using CAT5 or CAT6 ethernet cable, support max. Computer distance up to 40 meters away.

Optional Remote IP Access

- An expansion slot allows you to add an optional KVM over IP module to enable remote access to your servers.
- Gain BIOS level access to your servers for system maintenance, support or failure recovery via secure SSL authentication and encryption.

Features

- Support combo interface, VGA-USB & VGA-PS/2.
- Up to 40 meters between Servers to KVM.
- Dual slide rail capable LCD screen and keyboard tray independent Operate.
- Durable 104-key keyboard and touch pad.
- Quick and simple installation.
- Self-locking and auto release rails for ultra-convenience.
- Port selection via push buttons or On-Screen-Display (OSD).
- Dedicated daisy chain port to expand up to 256 servers.
- Access Control List (ACL) security function for up to 8 independent user accounts.

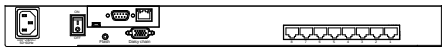

Rear of KVMD-1708/1908ASL-M6

Rear of KVMD-1716/1916ASL-M6

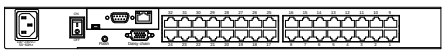

Rear of KVMD-1732/1932ASL-M6

Part No.		KVMD-1708ASL-M6	KVMD-1716ASL-M6	KVMD-1732ASL-M6	KVMD-1908ASL-M6	KVMD-1916ASL-M6	KVMD-1932ASL-M6
Direct no. of Computers		8	16	32	8	16	32
Maximum no. of Computers		232(Daisy Chain)	240(Daisy chain)	256(Daisy chain)	232(Daisy Chain)	240(Daisy chain)	256(Daisy chain)
LCD	Size	17”			19”		
	Backlight	LED			LED		
	Resolution	1280*1024			1280*1024		
	Max.color	16.7M			16.7M		
	Luminance	250cd/m2			250cd/m2		
	View Angel (H/V)	176 / 170			170 / 160		
	Contrast Ratio	1000 : 1			1000 : 1		
Port Selection		Push Button, OSD or Hotkey					
Expansion Slot		Yes, option for Remote IP Access					
Max. Computer Distance		40 meters (Servers to KVM)					
KB/Mouse Emulation		USB & PS2					
Rack Depth		522mm to 1100mm (rack cabinet front rails to rear rails)					
Power		100-240V AC 50/60Hz via IEC Type power cord					
Environment		Operation temp: 0 to 50℃ Storage temp: -20 to 60℃ Humidity: 10% - 90%, non-condensing Shock: 10G acceleration (11ms duration) Vibration: 17 to 500Hz 1G PTP					
Physical Dimensions / Net Weights		449.8x44.4x685mm (WxHxD) / 13.0KG			449.8x44.4x685mm (WxHxD) / 13.5KG		
Packing Dimensions / Gross weights		710x185x910mm (WxHxD) / 20.0KG			710x185x910mm (WxHxD) / 20.5KG		
Accessory							
1.8meter IEC Type Power Cord							
Option Relate Item							
DGU	CAT6 KVM Dongle-USB&VGA			DGP	CAT6 KVM Dongle -PS/2&VGA		
DGD	CAT6 KVM Dongle-USB&DVI			DIP-101	KVM over IP module for Remote Bios Level Access		

BUY ON
www.cablematic.com

Rear of KVMD-1708/1908ASL-M6

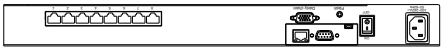

Rear of KVMD-1716/1916ASL-M6
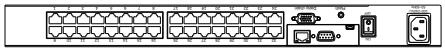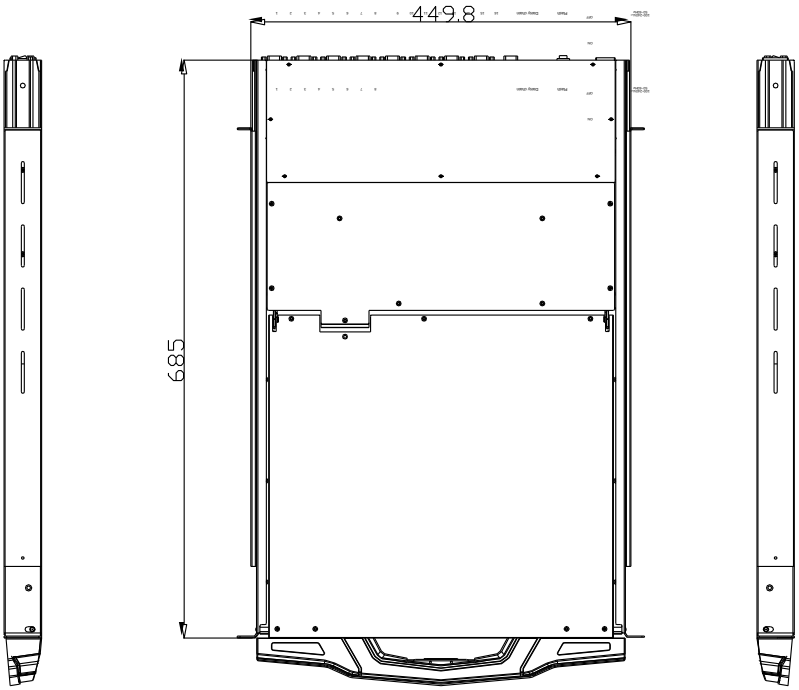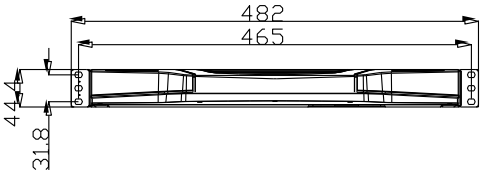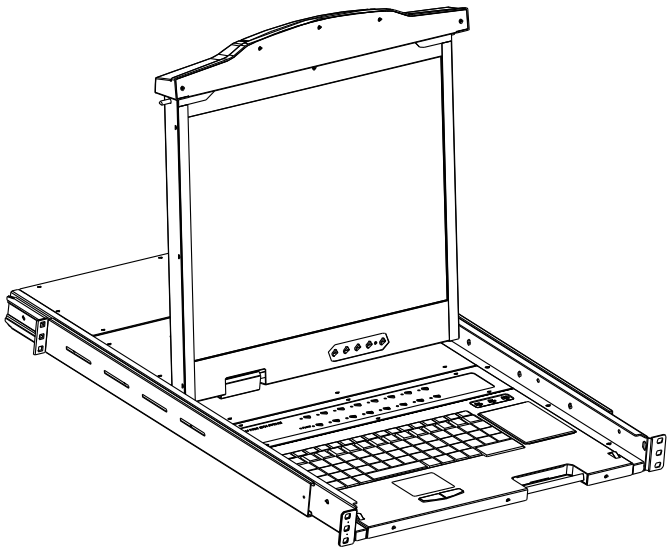
Rear of KVMD-1732/1932ASL-M6