WEIGHT	CUSTOMER NO:	REMARK
13g-K4	CA14	CABLEMATIC

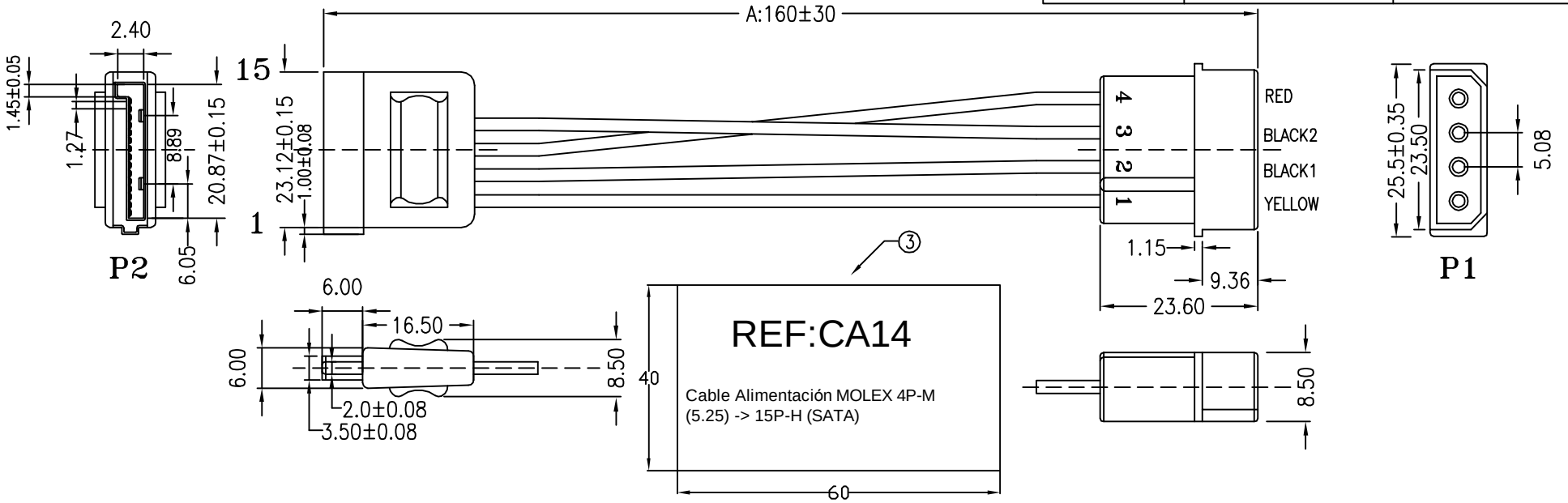

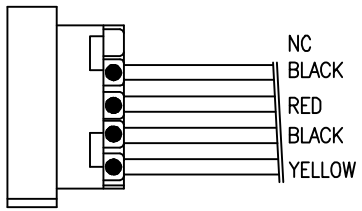

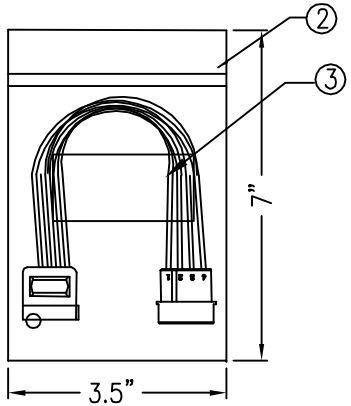

PINOUT:

P2	P1
7,8,9	4 RED
10,11,12	3 BLACK2
4,5,6	2 BLACK1
1,2,3	1 YELLOW

NOTES:

1) PRIMARY DIMENSION: A
2) WIRE: UL1007 18AWG HOOK UP WIRE: YELLOW BLACK1 BLACK2 RED.
3) 1PC/PE BAG+LABEL

REV.	ECR	DESCRIPTION	C.N.	DATE
A		FIRST EDITION	WUZAN	28/03/2011

THESE DRAWINGS AND SPECIFICATIONS ARE THE PROPERTY OF WIRETEK COMPUTER LIMITED AND SHALL NOT BE REPRODUCED COPIED OR USED IN ANY MANNER WITHOUT THE PRIOR WRITTEN CONSENT OF WIRETEK COMPUTER LIMITED.

UNLESS OTHERWISE SPECIFIDE:
DIMENSIONS ARE IN MILLIMETERS
ANGULAR TOLERANCE: ±1.0°

DIMENSIONS	TOLERANCE
0.00 TO 30.00mm	±0.10mm
30.01 TO 80.00mm	±0.13mm
80.01 TO 150.00mm	±0.15mm
150.01mm	±0.20mm

MATERIAL: MATERIAL
FINISH: FINISH

TITLE: POWER CABLE

CHKD.: | CONF.:
DR.: WUZAN | APPD.:
PART NO.: 2600-3989
SCALE: / | SHEET: 1/1 | UNIT: MM | SIZE: A4 | REV.: A

WFM-ED-07B