Rev	Modification Content	Date	Validate
A	the First Edition	2007-12-10	Cindy

ROHS

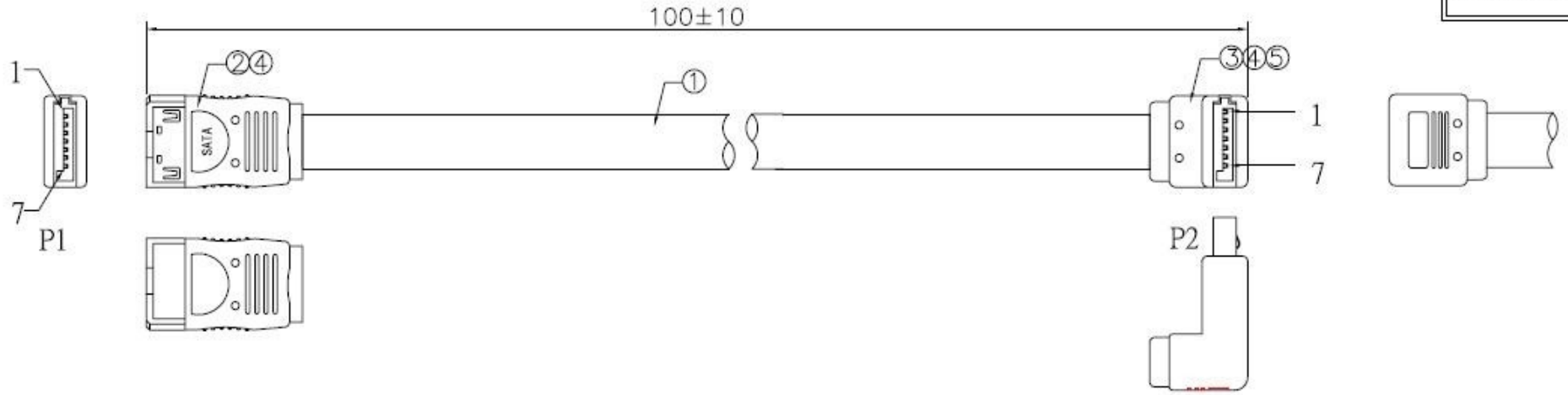

測試要求:

1. 成品需做100%電气測試,不得有任何斷路/短路,錯位,電器閃爍.
2. 絕緣&導通阻抗:5M Ω/Min& 5Ω/Max .
3. 測試電壓：DC 300V.
4. 兩端成型OK後,网尾處的外被不可有脫落象

包裝方式:

1. 單PCS裝PE袋,再10PCS用橡皮筋紮好.

NO.	P/N	DESCRIPTION	QTY
7	Carton	46*30*23cm 印紅色字 K=K	pcs
6	PE Bag	(13"+19")*26"*0.05mm	pcs
5	PE Bag	3"*8"*0.05	1 pcs
4	Molding	WHITE RUBBER BAND	1/10pcs
3	Molding	PVC 45P COLOR:BLACK	12 g
2	Connector	SATA II 7P FEMALE PIN GOLD FLASH	2 set
1	Cable	UL 2725 SERIAL ATA CABLE (26AWG*1P+28AWG/2D+AL/MY)*2F+BRAID (16/6/0.1TC) OD=4.0*9.0±0.1mm JACKET:BLACK,印白字	92 mm

Pin Assignment:

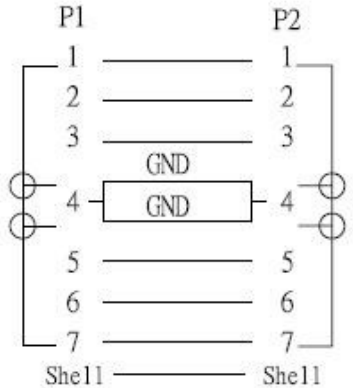

P/N	SATAII CABLE 180°-90°			
Item	AFA15210010			
Drawn By	Cindy	Customer NO.	DN14	N
Audited By			Unit : mm	
Date	2007-12-10		Rev. : 1.00	ME