CUSTOMER NO:	REMARK
	Cablematic

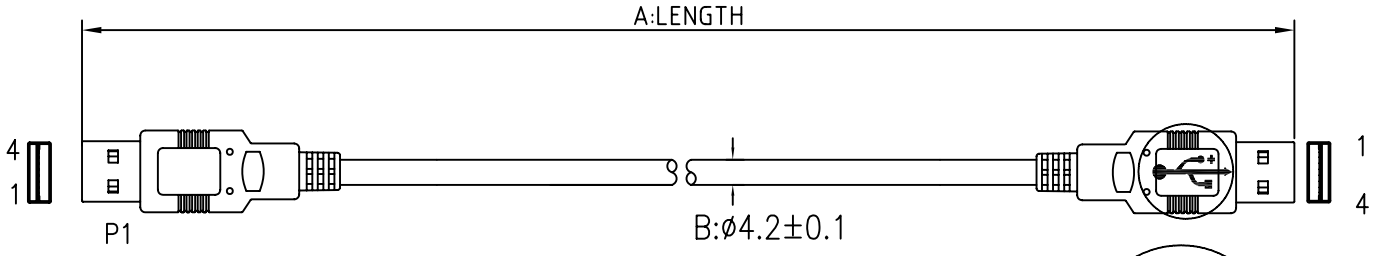

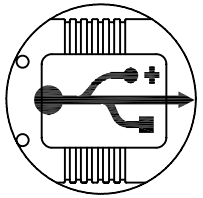

CUSTOMER NO.:	PART NO.:	Lenght	PE BAG SIZE	LABEL SIZE	Q'TY
CU35	W47UBGAMAM05	5000±50MM	8"*10"*0.08MM	40*60MM	80PCS
CU36	W47UBGAMAM7.5	7500±80MM	8"*12"*0.08MM	40*60MM	60PCS
CU37	W47UBGAMAM10	10000±100MM	9"*14"*0.08MM	40*60MM	40PCS

BUY ON
www.cablematic.com

PINOUT:

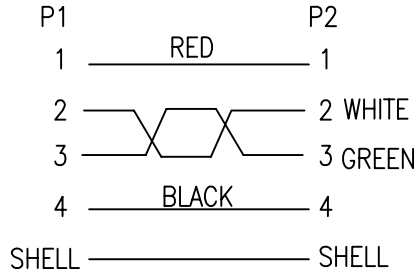

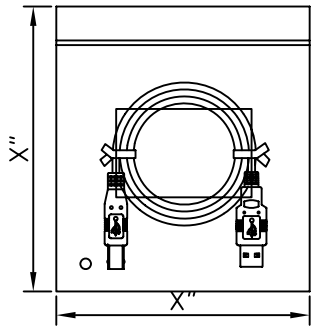

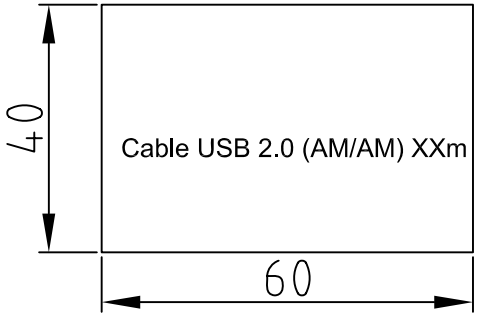

3	OUTER JACKET PVC 45Pa BEIGE(2209) ROHS
2	USB A/M WHITE 4P SOLDER TYPE RoHS
1	USB2.0 28#1P+24#2C+A+B(32BAM)+D OD:4.2MM BEIGE(2209)RoHS XXXXMM

REV.	ECR	DESCRIPTION	C.N.	DATE
A		FIRST EDITION		16/10/10

THESE DRAWINGS AND SPECIFICATIONS ARE THE PROPERTY OF WIRETEK COMPUTER LIMITED AND SHALL NOT BE REPRODUCED COPIED OR USED IN ANY MANNER WITHOUT THE PRIOR WRITTEN CONSENT OF WIRETEK COMPUTER LIMITED.

UNLESS OTHERWISE SPECIFIDE:
DIMENSIONS ARE IN MILLIMETERS
ANGULAR TOLERANCE: ±1.0°

DIMENSIONS	TOLERANCE
0.00 TO 30.00mm	±0.10mm
30.01 TO 80.00mm	±0.13mm
80.01 TO 150.00mm	±0.15mm
150.01mm ↑	±0.20mm

MATERIAL: MATERIAL
FINISH: FINISH

TITLE: USB2.0 CABLE

CHKD. | CONF.
DR. | APPD.
PART NO.

SCALE | SHEET 1/2 | UNIT MM | SIZE A4 | REV. A